14 Technical Data and Dimension Sheets for MOVIMOT®

14.1 Available MOVIMOT® motor combinations

14.1.1 MOVIMOT® drives with DRS motors

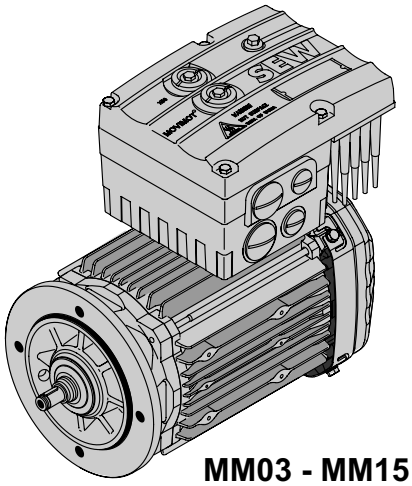

MM03 - MM15

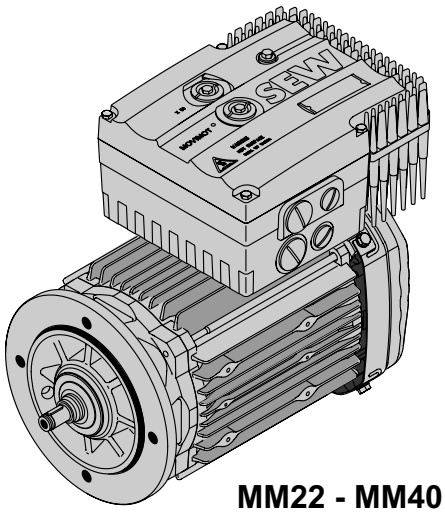

MM22 - MM40

63539axx

280 – 1400 rpm ⅄ 3 x 380 – 500 V (400 V) *IEC or* c UL us

Type	P_n [kW]	M_n [Nm]	M_a/M_n f > 5 Hz	n_n [rpm]	I_{n1} [A]	cos φ	J_{mot} [10^{-4} kgm^2] without brake	J_{mot} [10^{-4} kgm^2] with brake	M_{Bmax} [Nm]	m[1)] [kg]	m[2)] [kg]
DRS71S4 /../MM03	0.37	2.52	1.5	1400	1.3	0.99	4.9	6.2	5	9.9	12.3
DRS71M4 /../MM05	0.55	3.75	1.5	1400	1.6	0.99	7.1	8.4	10	11.2	13.8
DRS80S4 /../MM07	0.75	5.1	1.5	1400	1.9	0.99	14.9	16.4	10	13.6	16.6
DRS80M4 /../MM11	1.1	7.5	1.5	1400	2.4	0.99	21.5	26	14	16.4	20.1
DRS90M4 /../MM15	1.5	10.2	1.5	1400	3.5	0.99	35.5	40	20	20.5	25.1
DRS90L4 /../MM22	2.2	15.0	1.5	1400	5.0	0.99	43.5	49.5	40	24.7	30.7
DRS100M4 /../MM30	3.0	20.5	1.5	1400	6.7	0.99	56	62	40	29.2	35.2
DRS100LC4 /../MM40	4.0	27.3	1.5	1400	7.3	0.99	90	96	50	34.9	40.9

290 – 2900 rpm △ 3 x 380 – 500 V (400 V) *IEC or* c UL us

Type	P_n [kW]	M_n [Nm]	M_a/M_n f > 5 Hz	n_n [rpm]	I_{n1} [A]	cos φ	J_{mot} [10^{-4} kgm^2] without brake	J_{mot} [10^{-4} kgm2] with brake	M_{Bmax} [Nm]	m[1)] [kg]	m[2)] [kg]
DRS71S4 /../MM05	0.55	1.81	2.0	2900	1.6	0.99	4.9	6.2	5	9.9	12.3
DRS71M4 /../MM07	0.75	2.47	2.0	2900	1.9	0.99	7.1	8.4	10	11.2	13.8
DRS80S4 /../MM11	1.1	3.62	2.0	2900	2.4	0.99	14.9	16.4	10	13.6	16.6
DRS80M4 /../MM15	1.5	4.95	1.6	2900	3.5	0.99	21.5	26	14	16.4	20.1
DRS90M4 /../MM22	2.2	7.25	1.6	2900	5.0	0.99	35.5	40	20	21.6	26.2
DRS90L4 /../MM30	3.0	9.9	1.6	2900	6.7	0.99	43.5	49.5	40	24.7	30.7
DRS100M4 /../MM40	4.0	13.2	1.6	2900	7.3	0.99	56	62	40	29.9	35.9

1) mass of motor without brake

2) mass of motor with brake

Thermal classification F as standard

14.1.2 MOVIMOT® drives with DRS motors and increased short-term torque

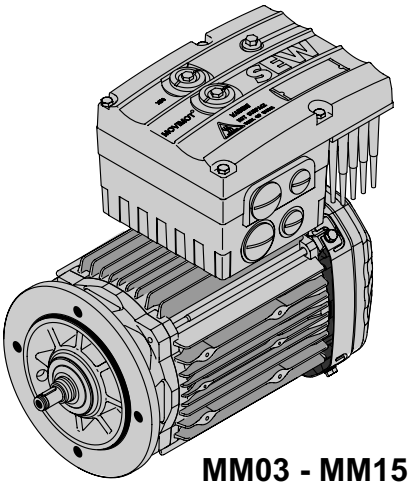

MM03 - MM15

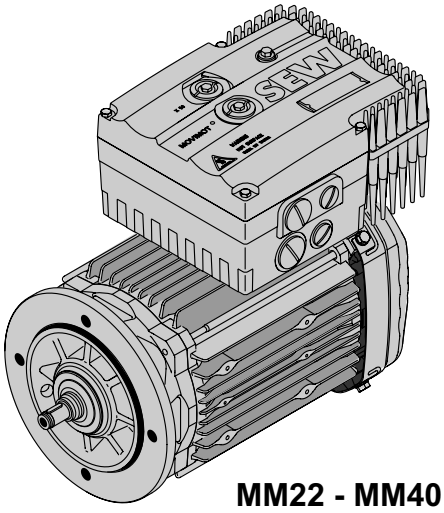

MM22 - MM40

63539axx

280 – 1400 rpm ⅄ 3 x 380 – 500 V (400 V) *IEC or* c UL us

Type	P_n [kW]	M_n [Nm]	M_a/M_n 1) f > 5 Hz	n_n [rpm]	I_{n1} [A]	cos φ	J_{mot} [10^{-4} kgm^2] without brake	J_{mot} [10^{-4} kgm^2] with brake	M_{Bmax} [Nm]	m 2) [kg]	m 3) [kg]
DRS71S4 /../MM05	0.37	2.52	2.1	1400	1.3	0.99	4.9	6.2	5	9.9	12.3
DRS71M4 /../MM07	0.55	3.75	2.1	1400	1.6	0.99	7.1	8.4	10	11.2	13.8
DRS80S4 /../MM11	0.75	5.1	2.1	1400	1.9	0.99	14.9	16.4	10	13.6	16.6
DRS80M4 /../MM15	1.1	7.5	2.1	1400	2.4	0.99	21.5	26	14	16.4	20.1
DRS90M4 /../MM22	1.5	10.2	2.1	1400	3.5	0.99	35.5	40	20	21.6	26.2
DRS90L4 /../MM30	2.2	15.0	2.1	1400	5.0	0.99	43.5	49.5	40	24.7	30.7
DRS100M4 /../MM40	3.0	20.5	2.0	1400	6.7	0.99	56	62	40	29.9	35.9

290 – 2900 rpm △ 3 x 380 – 500 V (400 V) *IEC or* c UL us

Type	P_n [kW]	M_n [Nm]	M_a/M_n 1) f > 5 Hz	n_n [rpm]	I_{n1} [A]	cos φ	J_{mot} [10^{-4} kgm^2] without brake	J_{mot} [10^{-4} kgm^2] with brake	M_{Bmax} [Nm]	m 2) [kg]	m 3) [kg]
DRS71S4 /../MM07	0.55	1.81	2.4	2900	1.6	0.99	4.9	6.2	5	9.9	12.3
DRS71M4 /../MM11	0.75	2.47	2.4	2900	1.9	0.99	7.1	8.4	10	11.2	13.8
DRS80S4 /../MM15	1.1	3.62	2.4	2900	2.4	0.99	14.9	16.4	10	13.6	16.6
DRS80M4 /../MM22	1.5	4.95	2.2	2900	3.5	0.99	21.5	26	14	17.5	21.2
DRS90M4 /../MM30	2.2	7.25	2.2	2900	5.0	0.99	35.5	40	20	21.6	26.2
DRS90L4 /../MM40	3.0	9.9	2.0	2900	6.7	0.99	43.5	49.5	40	25.4	31.4

1) Increased short-term torque in S3 operation, 25 % cdf
2) mass of motor without brake
3) mass of motor with brake

Thermal classification F as standard

14.1.3 MOVIMOT® drives with DRE motors

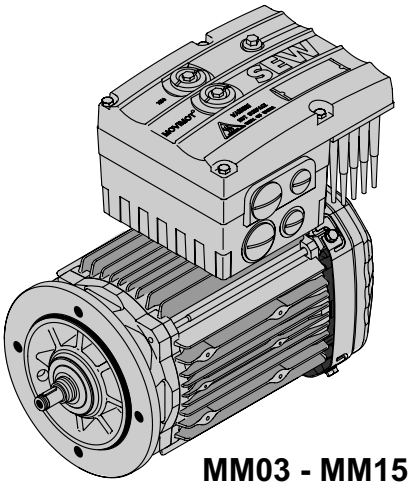

MM03 - MM15

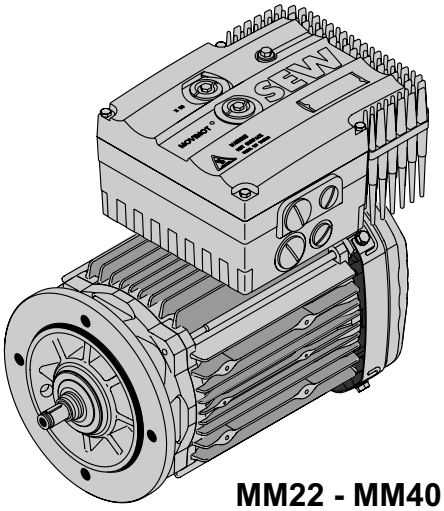

MM22 - MM40

63539axx

280 – 1400 rpm ⅄ 3 x 380 – 500 V (400 V) *IEC or* c UL US

Type	P_n [kW]	M_n [Nm]	M_a/M_n f > 5 Hz	n_n [rpm]	I_{n1} [A]	cos φ	J_{mot} [10^{-4} kgm^2] without brake	J_{mot} [10^{-4} kgm^2] with brake	M_{Bmax} [Nm]	m[1)] [kg]	m[2)] [kg]
DRE80M4 /../MM07	0.75	5.1	1.5	1400	1.9	0.99	21.5	23	10	16.4	19.4
DRE90M4 /../MM11	1.1	7.5	1.5	1400	2.4	0.99	35.5	40	20	20.5	25.1
DRE90L4 /../MM15	1.5	10.2	1.5	1400	3.5	0.99	43.5	48.5	20	23.6	28.1
DRE100M4 /../MM22	2.2	15	1.5	1400	5.0	0.99	56	62	28	29.2	35.2
DRE100LC4 /../MM30	3.0	20.5	1.5	1400	6.7	0.99	90	96	40	34.2	40.2
DRE132S4 /../MM40	4.0	27.3	1.5	1400	7.3	0.99	190	195	55	47.9	56.9

290 – 2900 rpm △ 3 x 380 – 500 V (400 V) *IEC or* c UL US

Type	P_n [kW]	M_n [Nm]	M_a/M_n f > 5 Hz	n_n [rpm]	I_{n1} [A]	cos φ	J_{mot} [10^{-4} kgm2] without brake	J_{mot} [10^{-4} kgm2] with brake	M_{Bmax} [Nm]	m[1)] [kg]	m[2)] [kg]
DRE80M4 /../MM11	1.1	3.62	1.6	2900	2.4	0.99	21.5	23	10	16.4	19.4
DRE90M4 /../MM15	1.5	4.95	1.6	2900	3.5	0.99	35.5	40	20	20.5	25.1
DRE90L4 /../MM22	2.2	7.25	1.6	2900	5.0	0.99	43.5	48.5	20	24.7	29.2
DRE100M4 /../MM30	3.0	9.9	1.6	2900	6.7	0.99	56	62	28	29.2	35.2
DRE100LC4 /../MM40	4.0	13.2	1.6	2900	7.3	0.99	90	96	40	34.9	40.9

1) mass of motor without brake
2) mass of motor with brake

Thermal classification F as standard

14.1.4 MOVIMOT® drives with DRE motors and increased short-term torque

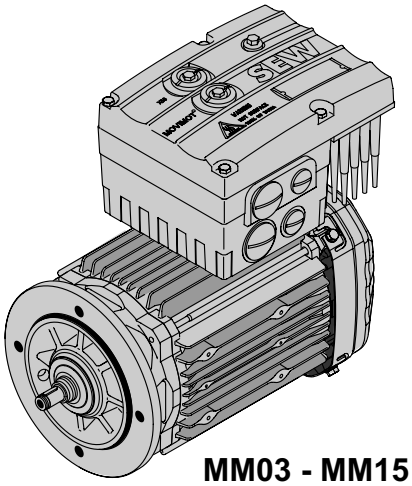

MM03 - MM15

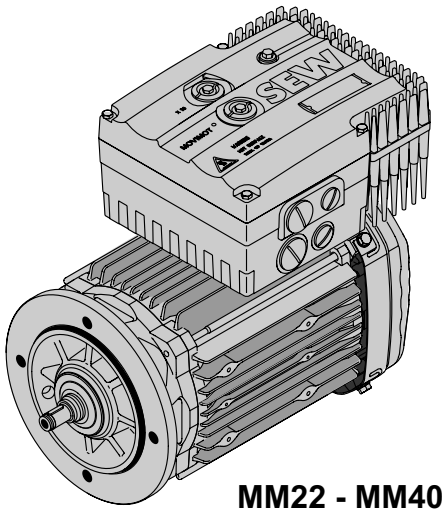

MM22 - MM40

63539axx

280 – 1400 rpm ⅄ 3 x 380 – 500 V (400 V) *IEC or* c UL US

Type	P_n [kW]	M_n [Nm]	M_a/M_n f > 5 Hz	n_n [rpm]	I_{n1} [A]	cos φ	J_{mot} [10^{-4} kgm^2] without brake	J_{mot} [10^{-4} kgm^2] with brake	M_{Bmax} [Nm]	m[1)] [kg]	m[2)] [kg]
DRE80M4 /../MM11	0.75	5.1	2.1	1400	1.9	0.99	21.5	23	10	16.4	19.4
DRE90M4 /../MM15	1.1	7.5	2.1	1400	2.4	0.99	35.5	40	20	20.5	25.1
DRE90L4 /../MM22	1.5	10.2	2.1	1400	3.5	0.99	43.5	48.5	20	24.7	29.2
DRE100M4 /../MM30	2.2	15.0	2.1	1400	5.0	0.99	56	62	28	29.2	35.2
DRE100LC4 /../MM40	3.0	20.5	2.1	1400	6.7	0.99	90	96	40	34.9	40.9

290 – 2900 rpm △ 3 x 380 – 500 V (400 V) *IEC or* c UL US

Type	P_n [kW]	M_n [Nm]	M_a/M_n f > 5 Hz	n_n [rpm]	I_{n1} [A]	cos φ	J_{mot} [10^{-4} kgm2] without brake	J_{mot} [10^{-4} kgm2] with brake	M_{Bmax} [Nm]	m[1)] [kg]	m[2)] [kg]
DRE80M4 /.../MM15	1.1	3.62	2.2	2900	2.4	0.99	21.5	23	10	16.4	19.4
DRE90M4 /.../MM22	1.5	4.95	2.2	2900	3.5	0.99	35.5	40	20	21.6	26.2
DRE90L4 /.../MM30	2.2	7.25	2.2	2900	5.0	0.99	43.5	48.5	20	24.7	29.2
DRE100M4 /.../MM40	3.0	9.9	2.2	2900	6.7	0.99	56	62	28	29.9	35.9

1) mass of motor without brake

2) mass of motor with brake

Thermal classification F as standard

14.1.5 MOVIMOT® drives with DRP motors

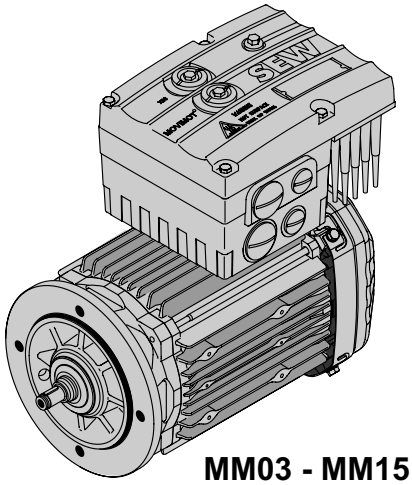

MM03 - MM15

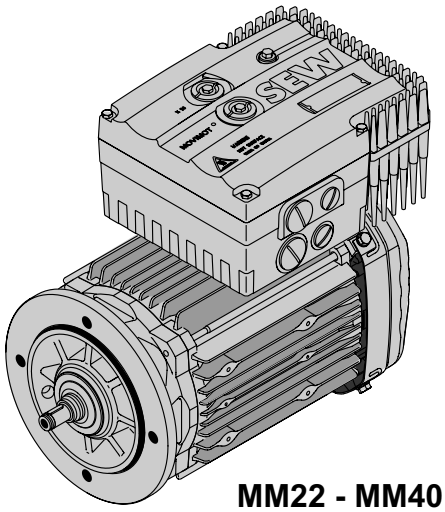

MM22 - MM40

63539axx

280 – 1400 rpm ⅄ 3 x 380 – 500 V (400 V) *IEC or* c UL US

Type	P_n [kW]	M_n [Nm]	M_a/M_n f > 5 Hz	n_n [rpm]	I_{n1} [A]	cos φ	J_{mot} [10^{-4} kgm^2] without brake	J_{mot} [10^{-4} kgm^2] with brake	M_{Bmax} [Nm]	m[1)] [kg]	m[2)] [kg]
DRP90M4 /../MM07	0.75	5.1	1.5	1400	1.9	0.99	35.5	37	10	20.5	24.6
DRP90L4 /../MM11	1.1	7.5	1.5	1400	2.4	0.99	43.5	48.5	20	23.6	28.1
DRP100M4 /../MM15	1.5	10.2	1.5	1400	3.5	0.99	56	61	20	28.1	32.6
DRP100L4 /../MM22	2.2	15.0	1.5	1400	5.0	0.99	68	74	40	32.2	38.2
DRP112M4 /../MM30	3.0	20.5	1.5	1400	6.7	0.99	146	151	40	45.2	54.2
DRP132M4 /../MM40	4.0	27.3	1.5	1400	7.3	0.99	255	265	80	62.9	76.9

290 – 2900 rpm △ 3 x 380 – 500 V (400 V) *IEC or* c UL US

Type	P_n [kW]	M_n [Nm]	M_a/M_n f > 5 Hz	n_n [rpm]	I_{n1} [A]	cos φ	J_{mot} [10^{-4} kgm2] without brake	J_{mot} [10^{-4} kgm2] with brake	M_{Bmax} [Nm]	m[1)] [kg]	m[2)] [kg]
DRP90M4 /../MM11	1.1	3.62	1.6	2900	2.4	0.99	35.5	37	10	20.5	24.6
DRP90L4 /../MM15	1.5	4.95	1.6	2900	3.5	0.99	43.5	48.5	20	23.6	28.1
DRP100M4 /../MM22	2.2	7.25	1.6	2900	5.0	0.99	56	61	20	29.2	33.7
DRP100L4 /../MM30	3.0	9.9	1.6	2900	6.7	0.99	68	74	40	32.2	38.2
DRP112M4 /../MM40	4.0	13.2	1.6	2900	7.3	0.99	146	151	40	45.9	54.9

1) mass of motor without brake
2) mass of motor with brake

Thermal classification F as standard

14.1.6 MOVIMOT® drives with DRP motors and increased short-term torque

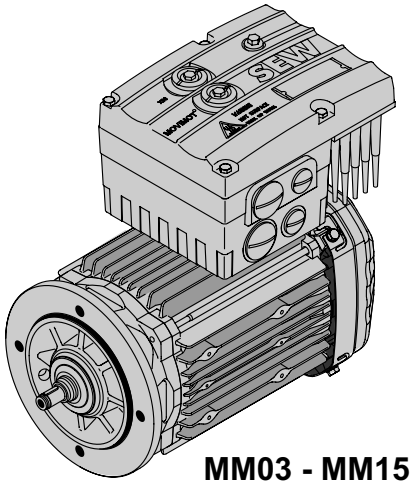

MM03 - MM15

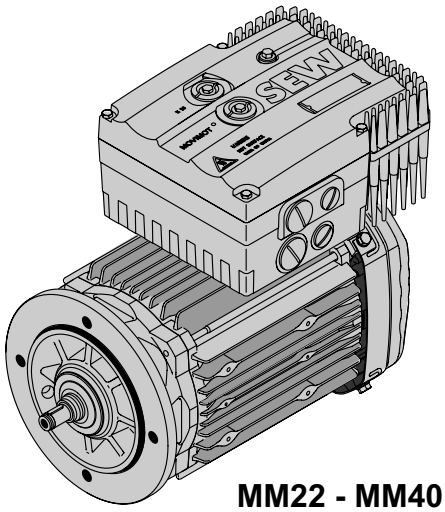

MM22 - MM40

63539axx

280 – 1400 rpm ⅄ 3 x 380 – 500 V (400 V) *IEC or* c UL US

Type	P_n [kW]	M_n [Nm]	M_a/M_n f > 5 Hz	n_n [rpm]	I_{n1} [A]	cos φ	J_{mot} [10^{-4} kgm^2] without brake	J_{mot} [10^{-4} kgm^2] with brake	M_{Bmax} [Nm]	m 1) [kg]	m 2) [kg]
DRP90M4 /../MM11	0.75	5.1	2.1	1400	1.9	0.99	35.5	37	10	20.5	24.6
DRP90L4 /../MM15	1.1	7.5	2.1	1400	2.4	0.99	43.5	48.5	20	23.6	28.1
DRP100M4 /../MM22	1.5	10.2	2.1	1400	3.5	0.99	56	61	20	29.2	33.7
DRP100L4 /../MM30	2.2	15.0	2.1	1400	5.0	0.99	68	74	40	32.2	38.2
DRP112M4 /../MM40	3.0	20.5	2.1	1400	6.7	0.99	146	151	40	45.9	54.9

290 – 2900 rpm △ 3 x 380 – 500 V (400 V) *IEC or* c UL US

Type	P_n [kW]	M_n [Nm]	M_a/M_n f > 5 Hz	n_n [rpm]	I_{n1} [A]	cos φ	J_{mot} [10^{-4} kgm2] without brake	J_{mot} [10^{-4} kgm2] with brake	M_{Bmax} [Nm]	m 1) [kg]	m 2) [kg]
DRP90M4 /../MM15	1.1	3.62	2.2	2900	2.4	0.99	35.5	37	10	20.5	24.6
DRP90L4 /../MM22	1.5	4.95	2.2	2900	3.5	0.99	43.5	48.5	20	24.7	29.2
DRP100M4 /../MM30	2.2	7.25	2.2	2900	5.0	0.99	56	61	20	29.2	33.7
DRP100L4 /../MM40	3.0	9.90	2.2	2900	6.7	0.99	68	74	40	32.9	38.9

1) mass of motor without brake
2) mass of motor with brake

Thermal classification F as standard

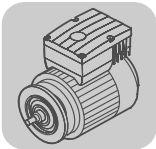

14.2 Connection technology MOVIMOT® standard design

Overview

MOVIMOT® D-503-00 is supplied without plug connector if not specified otherwise in the order. The plug connectors listed in the following table are available as standard. For other types, please contact SEW-EURODRIVE.

Order designation	Function	Terminal box design	Manufacturer designation
MM../AVT1	RS-485	Standard	Round plug connector M12 x 1
MM../ASA3	Power	Modular	Harting HAN® 10 ES pin element (built-on housing with two clips)
MM../ASA3/AVT1	Power/RS-485	Modular	Harting HAN® 10 ES pin element (built-on housing with two clips) + Round plug connector M12 x 1
MM../AMA6	Power/RS-485	Modular	Harting HAN Modular® pin element (built-on housing with 2 clip)
MM../AMD6	Power/RS-485	Modular	Harting HAN Modular® pin element (built-on housing with 1 clip)
MM../APG6	Power/RS-485	Modular	Phoenix Contact PLUSCON-VC (3 inserts)

Terminal box design:

The modular terminal box offers the following functions compared to the standard terminal box:

- The position of the cable entries/plug connectors can later be turned to the opposite side (see "MOVIMOT® operating instructions").
- Integration of options (see sec. "Options")

Possible plug connector positions

The following positions are possible for plug connectors:

Plug connectors	Possible positions
AVT1	X (standard)
	2
ASA3	X (standard)
	2
ASA3/AVT1	ASA3 = X (standard) + AVT1 = X (standard)
	ASA3 = 2 + AVT1 = 2
AMA6 **AMD6**	X (standard)
	2
APG6 (not available for all motor/gear unit combinations)	X (standard)
	2

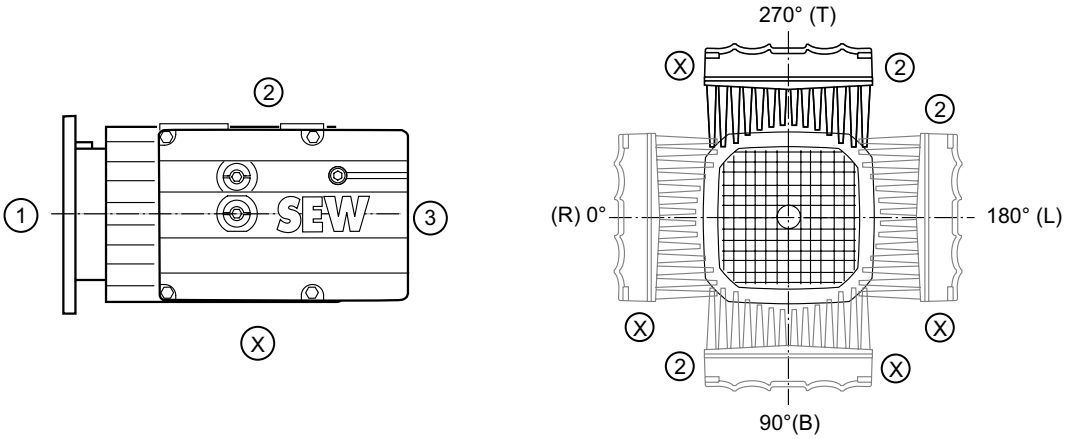

63369axx

Pin assignment

Pin assignment for AVT1, ASA3:

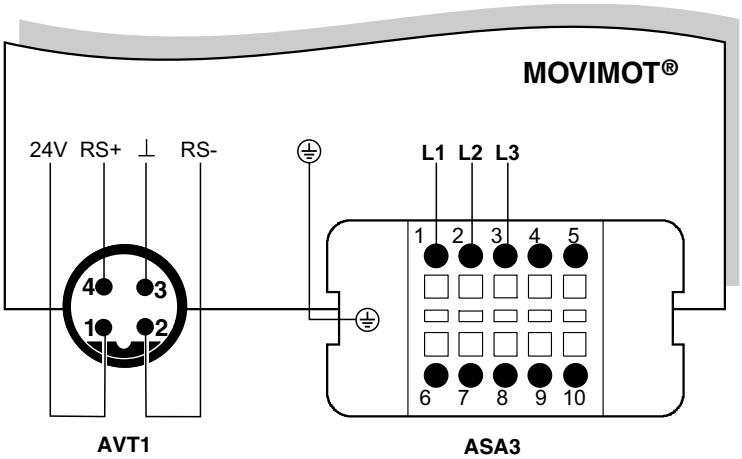

52113AXX

Pin assignment for AMA6, AMD6:

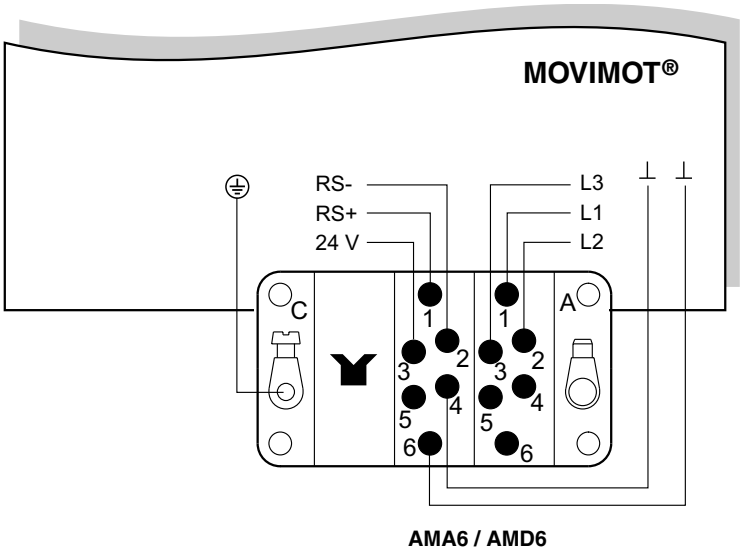

52459AXX

APG6 plug connector:

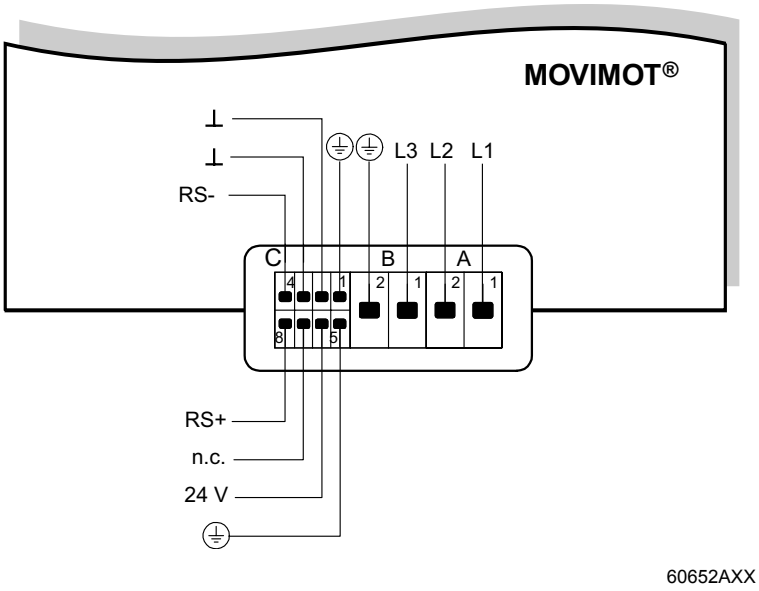

14.3 Sample order MOVIMOT® standard design

The unit designation of the MOVIMOT® gearmotor starts from the component on the output end.

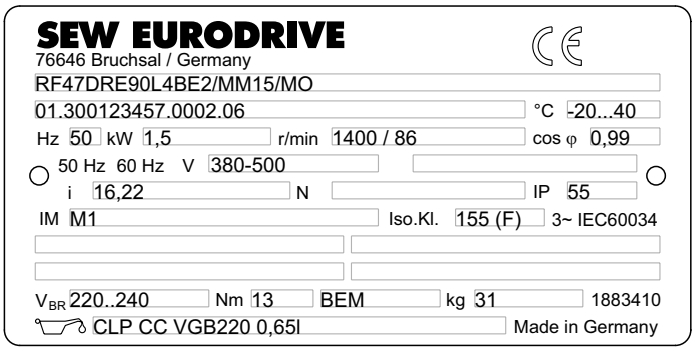

63297axx

RF 47 DRE 90L4 BE/MM15/MO

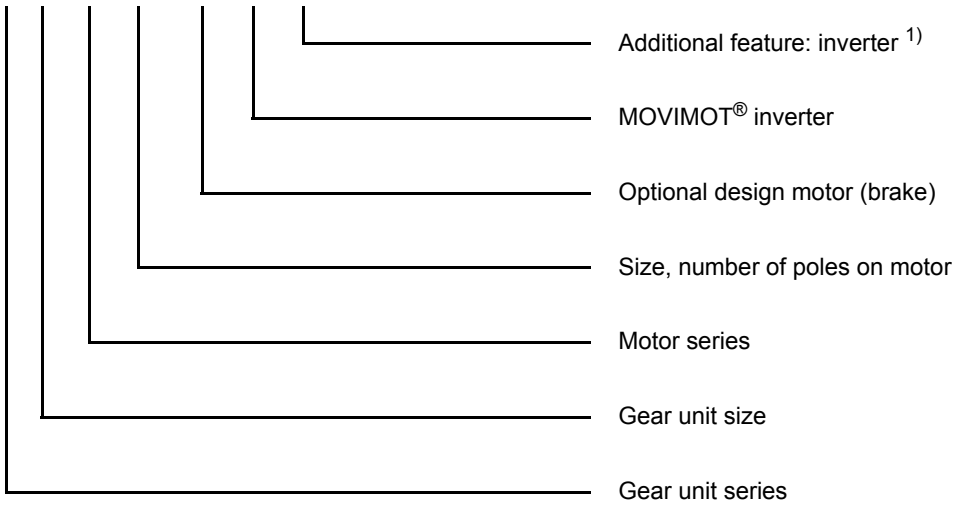

1) The nameplate only displays options installed at the factory.

14.4 Options

14.4.1 Options integrated into terminal box

- The options BEM, BES, URM, MLU13A and MNF11A are integrated in the MOVIMOT® terminal box.
- The MLU13A and MNF11A options can only be ordered in combination with the modular terminal box.
- The modular terminal box is assigned depending on the ordered option and the MOVIMOT® size.

BEM brake control

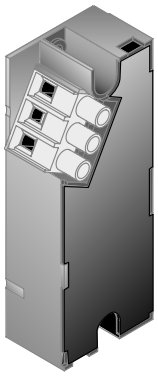

Functional description:

- The BEM brake rectifier can be used in conjunction with the MOVIMOT® MM..D for controlling the brake (see also the MOVIMOT® operating instructions). The brake is controlled by means of parameter setting or activating additional function 7 or 9.
- The BEM brake controller realizes fast release and application of the mechanical brake.
- The option is integrated in the MOVIMOT® terminal box.
- **Important: The brake coil must correspond to the connection voltage**.

Technical data:

Option	BEM
Part number	829 611 1
Function	Brake rectifier
Rated supply voltage	AC 230 V...AC 500 V, +10% / -15% 50...60 Hz ± 5% Black connection wires
Control voltage	DC 0...5 V Red/blue connecting wires, pluggable
Braking current	max. DC 0.8 A Brake connection 13, 14, 15
Degree of protection	IP20
Ambient temperature	-25...+60 °C
Storage temperature	-25...+80 °C

BES brake control

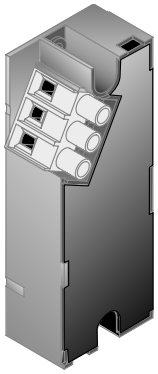

Functional description:

- The BES brake rectifier can be used in conjunction with MOVIMOT® MM..D for controlling a DC 24 V brake (not standard). See also MOVIMOT® operating instructions. The brake is controlled by means of parameter setting or activating additional function 7 or 9.
- The BES brake controller realizes fast release and application of the mechanical brake.
- The option is integrated in the MOVIMOT® terminal box.
- **Important: The brake coil must be designed as DC 24 V coil.**

Technical data:

Option	BES
Part number	0 829 8475
Function	Brake control
Rated supply voltage	DC 24 V, +10% / -15% (red/black connecting wires)
Control voltage	DC 0...5 V Red/blue connecting wires, pluggable
Braking current	max. DC 3.0 A Brake connection 13, 14, 15
Degree of protection	IP20
Ambient temperature	-25...+60 °C
Storage temperature	-25...+80 °C

URM voltage relay

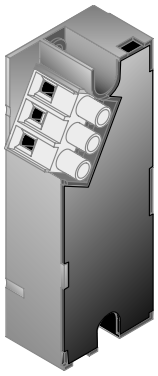

Functional description:

- The UMR voltage relay implements rapid application of the mechanical brake.
- The option is integrated in the MOVIMOT® terminal box.
- **Important: The brake coil must correspond to the MOVIMOT® standard (AC 120 V or 230 V).**

Technical data:

Option	URM
Part number	0 827 601 3
Function	Voltage relay
Rated voltage U_N	DC 36...167 V (Brake coil AC 88..0.400 V)
Braking current I_N	0.75 A
Degree of protection	IP20
Ambient temperature	-25...+60 °C
Storage temperature	-25...+85 °C
Disconnection time t_{off}	approx. 40 ms (cut-off in the DC circuit)

Internal DC 24 V voltage MLU13A

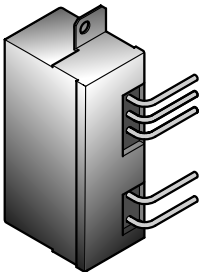

Functional description:

The MLU13A option is integrated in the terminal box of MOVIMOT® and allows for operating a MOVIMOT® unit including one option with a maximum current consumption of 70 mA (MBG11A, MWA21A) without external 24 V auxiliary voltage. The option is installed in the modular terminal box on delivery.

Technical data:

Option	MLU13A
Part number	1 820 596 8
Function	24 V voltage supply
Input voltage	AC 380 V... 500 V ± 10 % (50/60 Hz)
Output voltage	DC 24 V ± 25 %
Output power	max. 8 W
Degree of protection	IP20
Ambient temperature	-25...+85 °C
Storage temperature	-25...+85 °C

NOTE

Note that the height of the terminal box is higher for MOVIMOT® MM03 to MM15 by **17 mm**.

Internal line filter MNF11A

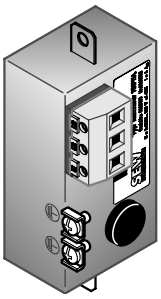

Functional description:

The MNF11A option is integrated in the terminal box of MOVIMOT® (MM03 - MM15) and allows for a drive system that complies with category C1 according to EN 61800-3 with respect to interference emission. The option requires the modular terminal box with increased dimensions.

Technical data:

Option	MNF11A (for MM03D-503-00...MM15D-503-00 or MM03D-233-00...MM07D-233-00)
Part number	0 828 316 8
Function	3-phase line filter (allows for category C1 to EN 61800-3)
Input voltage	3 x 380 V ±10 % / 50...60 Hz
Input current	4 A
Degree of protection	IP00
Ambient temperature	-25...+60 °C
Storage temperature	-25...+85 °C

NOTE

Note that the height of the terminal box is higher for MOVIMOT® MM03 to MM15 by **17 mm**.

14.4.2 DC 24 V supply MLU.1A

Functional description

The MLU.1A option is mounted in a cable gland of the MOVIMOT® and offers the opportunity to operate one MOVIMOT® including **one** option with a current consumption of max. 70 mA (MBG11A, MWA21A) without external 24 V auxiliary power supply.

Technical data

Option	MLU11A	MLU21A
Part number	0 823 383 7	0 823 387 X
Function	24 V voltage supply	
Input voltage	AC 380...500 V ± 10 % (50/60 Hz)	AC 200..0.240 V ± 10 % (50/60 Hz)
Output voltage	DC 24 V ± 25 %	
Output power	Max. 6 W	
Degree of protection	IP 65	
Ambient temperature	-25...+60 °C	
Storage temperature	-25...+85 °C	

Dimensions and connection assignment

The following figure shows the dimensions and the connection assignments of the MLU.1A option:

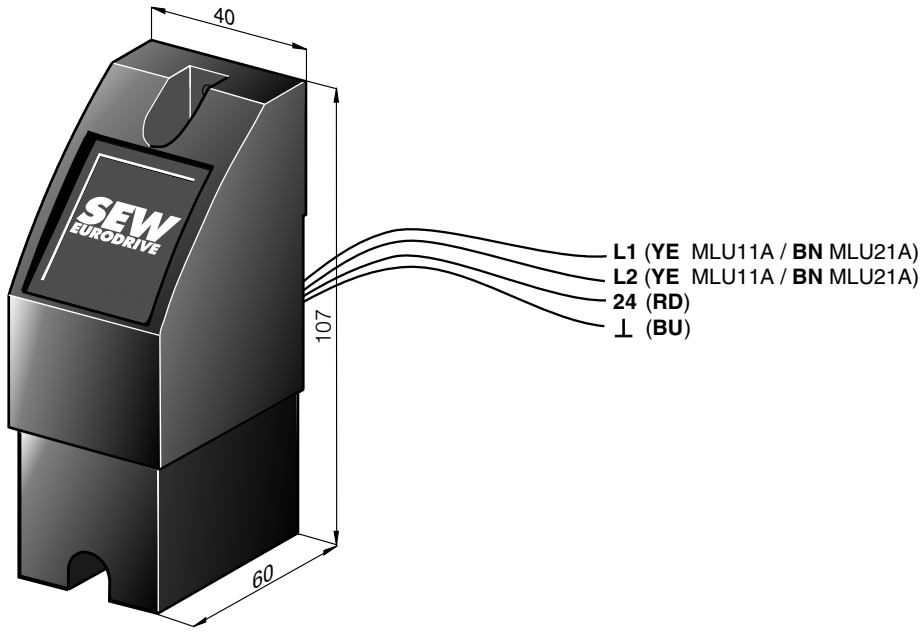

03194bxx

14.4.3 Speed control module with DC 24 V supply MLG.1A

Functional description

The MLG.1A option is mounted in a cable gland of MOVIMOT® and offers the possibility of adjusting the input speed in the range of -100 % ... +100 % f_{max} (potentiometer f1) as well as of powering the inverter with the DC 24 V auxiliary voltage.

Technical data

Option	MLG11A	MLG21A
Part number	0 823 384 5	0 823 388 8
Function	Setpoint generator and 24 V voltage supply	
Input voltage	AC 380...500 V ± 10 % (50/60 Hz)	AC 200..0.240 V ± 10 % (50/60 Hz)
Output voltage	DC 24 V ± 25 %	
Output power	Max. 6 W	
Setpoint resolution	1 %	
Serial interface[1)]	RS-485 for connecting a MOVIMOT® inverter	
Degree of protection	IP65	
Ambient temperature	-15...+60 °C	
Storage temperature	-25...+85 °C	

1) with integrated dynamic terminating resistor

Dimensions and connection assignment

The following figure shows the dimensions and the connection assignments of the MLG.1A option:

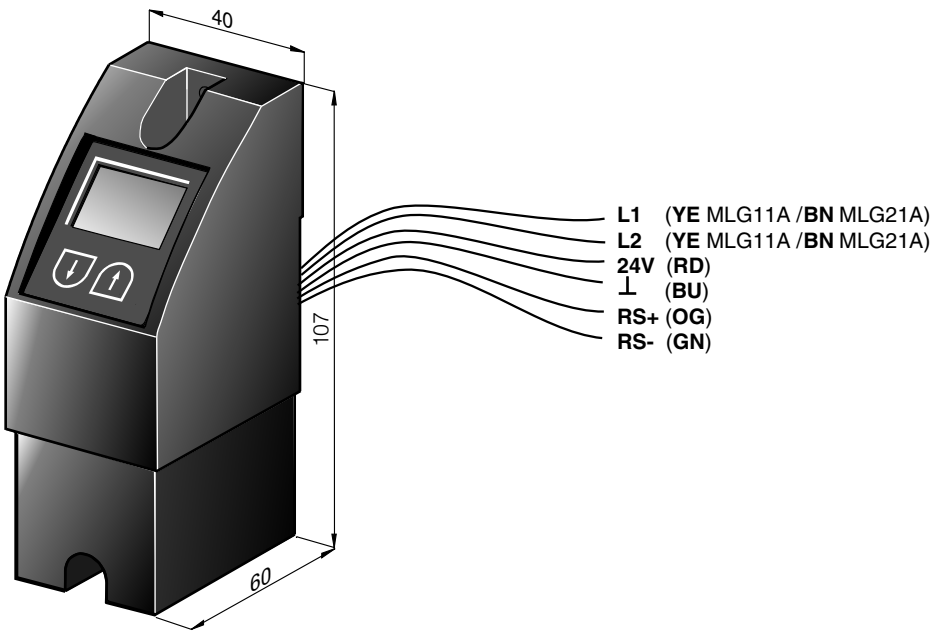

03195bxx

14.4.4 MBG11A speed control module

Description of functions

- The MBG11A setpoint control module has 2 keys and a display. They make it possible to adjust the speed remotely in the range from -100 %... +100 % f_{max} (potentiometer f1).
- Up to 31 MOVIMOT® units can be controlled at the same time (broadcasting).

Technical data

Option	MBG11A
Part number	0 822 547 8
Function	Keypad
Input voltage	DC 24 V ± 25 %
Current consumption	approx. 70 mA
Setpoint resolution	1 %
Serial interface[1)]	RS-485 for connecting max. 31 MOVIMOT® inverters (max. 200 m, 9600 Baud)
Degree of protection	IP65
Ambient temperature	-15...+60 °C
Storage temperature	-25...+85 °C

1) with integrated dynamic terminating resistor

Dimensions and connection assignment

The following figure shows the dimensions and the connection assignments of the MGB11A option:

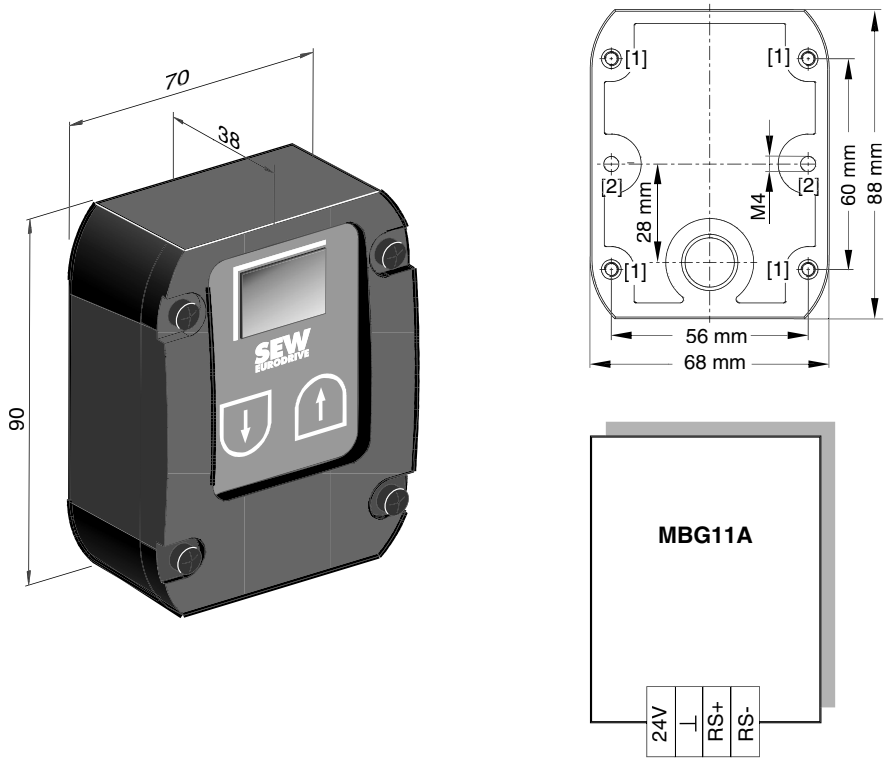

52528axx

[1] Tapped hole on the rear
[2] Retaining holes for M4 screws

14.4.5 MWA21A setpoint converter

Description of functions

- The MWA21A setpoint converter converts an analog setpoint and control signals into an RS-485 protocol.
- This conversion allows for remote control of the MOVIMOT® from the control cabinet.
- Up to 31 MOVIMOT® units can be controlled at the same time (broadcasting).

Technical data

Option	MWA21A
Part number	0 823 006 4
Function	Speed control module
Input voltage	DC 24 V ± 25 %
Current consumption	approx. 70 mA
Setpoint resolution	1 %
Serial interface[1)]	RS-485 for connecting max. 31 MOVIMOT® inverters max. 200 m, max. 9600 baud Unidirectional communication Cycle time: 100 ms
Analog input	0...10 V / 2...10 V, $R_i \approx 12\ k\Omega$ 0...20 mA / 4...20 mA, $R_i \approx 22\ \Omega$
Setpoint resolution of the analog input	8 bits (± 1 bit)
Signal level binary inputs	+13 V ...+30 V = “1” - 3 V ...+5 V = “0”
Degree of protection	IP20
Ambient temperature	-15...+60 °C
Storage temperature	-25...+85 °C

1) with integrated dynamic terminating resistor

Dimensions and connection assignment

The following figure shows the dimensions and the connection assignments of the MWA21A option:

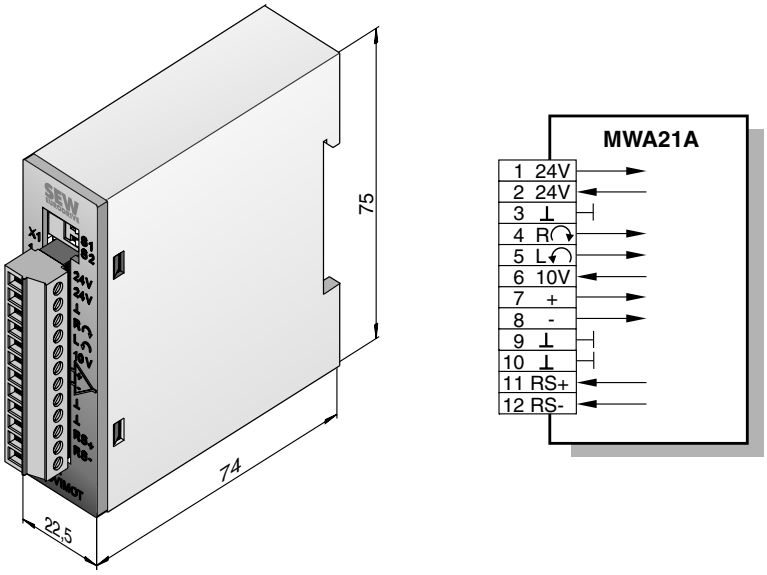

03197axx

14.4.6 DBG keypad (in preparation)

Functional description

You can use the DBG keypad for parameterization and manual operation of MOVIMOT® MM..D drives. In addition to that, the keypad displays important information about the state of the MOVIMOT® drive.

Features

- Illuminated plain text display, up to 7 languages can be set
- Keypad with 21 keys
- Can be connected via extension cable DKG60B (5 m [16.4 ft])

Overview

Keypad		Language	Part number
56555AXX	**DBG60B-01**	DE/EN/FR/IT/ES/PT/NL (German / English / French / Italian / Spanish / Portuguese / Dutch)	1820 403 1
	DBG60B-02	DE / EN / FR / FI / SV / DA / TR (German / English / French / Finnish / Swedish / Danish / Turkish)	1820 405 8
	DBG60B-03	DE/EN/FR/RU/PL/CS (German / English / French / Russian / Polish / Czech)	1820 406 6
	DBG60B-04	DE / EN / FR / ZH (German / English / French / Chinese)	1820 850 9
	Extension cables	Description (scope of delivery)	Part number
	DKG60B	• Length 5 m • 4-core, shielded cable	0817 583 7

Technical data

Option	DBG60B-01	DBG60B-02	DBG60B-3	DBG60B-4
Function	Keypad			
Connection	RJ-10 plug for connection to the X50 diagnostics interface			
Degree of protection	IP40 (EN 60529)			
Ambient temperature	0...+40 °C			
Storage temperature	-20...+80 °C			

14.4.7 Internal braking resistors

Assignment

MOVIMOT® type	Braking resistor	Part number
MM03D-503-00...MM15D-503-00 MM03D-233-00...MM07D-233-00	BW1	0 822 897 3[1)]
MM22D-503-00...MM40D-503-00 MM11D-233-00...MM22D-233-00	BW2	0 823 136 2[1)]

1) Two screws M4 x 8, included in scope of delivery

14.4.8 External braking resistors

Assignment

MOVIMOT® type	Braking resistor	Part number	Guard
MM03D-503-00...MM15D-503-00 MM03D-233-00...MM07D-233-00	BW200-003/K-1.5	0 828 291 9	0 813 152 X
	BW200-005/K-1.5	0 828 283 8	–
	BW150-010	0 802 285 2	–
MM22D-503-00...MM40D-503-00 MM11D-233-00...MM22D-233-00	BW100-003/K-1.5	0 828 293 5	0 813 152 X
	BW100-005/K-1.5	0 828 286 2	–
	BW068-010	0 802 287 9	–
	BW068-020	0 802 286 0	–

BW100...
BW200...

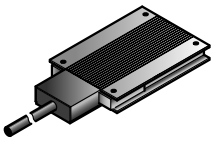

Technical data:

	BW100-003/ K-1.5	BW100-005/ K-1.5	BW200-003/ K-1.5	BW200-005/ K-1.5
Part number	0 828 293 5	0 828 286 2	0 828 291 9	0 828 283 8
Function	Dissipating the regenerative energy			
Degree of protection	IP65			
Resistance	100 Ω	100 Ω	200 Ω	200 Ω
Power in S1, 100 % cdf	100 W	200 W	100 W	200 W
Dimensions W x H x D	146 x 15 x 80 mm	252 x 15 x 80 mm	146 x 15 x 80 mm	252 x 15 x 80 mm
Cable length	1.5 m			

BW150...
BW068...

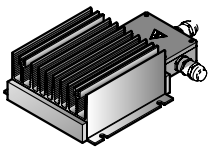

Technical data:

	BW150-010	BW068-010	BW068-020
Part number	0 802 285 2	0 802 287 9	0 802 286 0
Function	Dissipating the regenerative energy		
Degree of protection	IP66		
Resistance	150 W	68 W	68 W
Power according to UL in S1, 100 % cdf	600 W	600 W	1200 W
Power according to CE in S1, 100 % cdf	900 W	900 W	1800 W
Dimensions W x H x D	260 x 75 x 174 mm	260 x 75 x 174 mm	610 x 75 x 174 mm
Maximum permitted cable length	15 m		

14.4.9 Factory installed options

The following options can be installed and supplied if required (mounted and wired ready for operation):

- Local DC 24 V supply (MLU...)
- Local speed control module with DC 24 V supply (MLG.1A)
- PROFIBUS fieldbus interface (MFP../MQP..)
- INTERBUS fieldbus interface (MFI../MQI..)
- DeviceNet fieldbus interface (MFD../MQD..)
- CANopen fieldbus interface (MFO..)
- AS-Interface (MFK..)
- Hybrid cable for connection between MF.../Z.3. or MF../.6. field distributor and MOVIMOT® (KPF6, 1...5 meters)
- MNF11A line filter
- Brake control (BEM or BES) or voltage relay (URM)

Important order information

The options can be installed in the following positions:

- Position "2"
- Position "X" (standard)

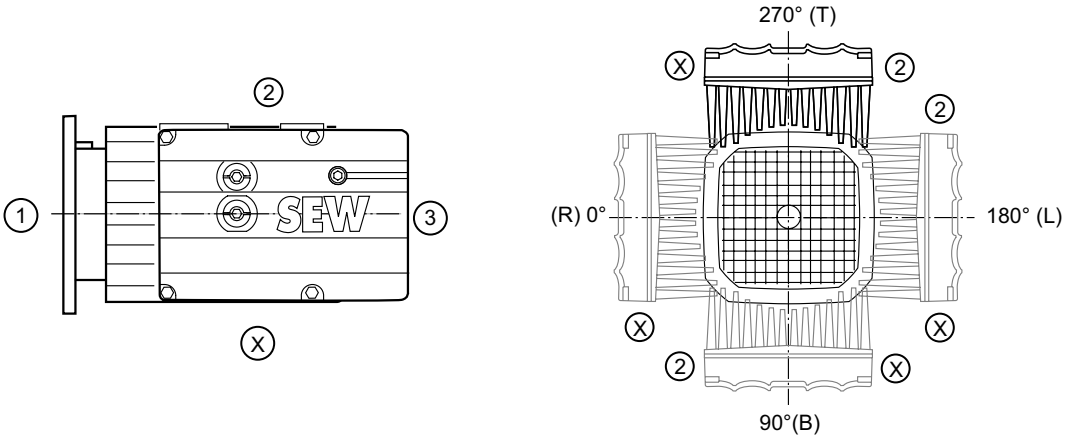

63369axx

For a sample order, please refer to page 393.

14.5 MOVIMOT® retrofit sets

14.5.1 Scope of delivery of retrofit set

The following figure shows the scope of delivery of the MOVIMOT® MM03D...MM40D retrofit set.

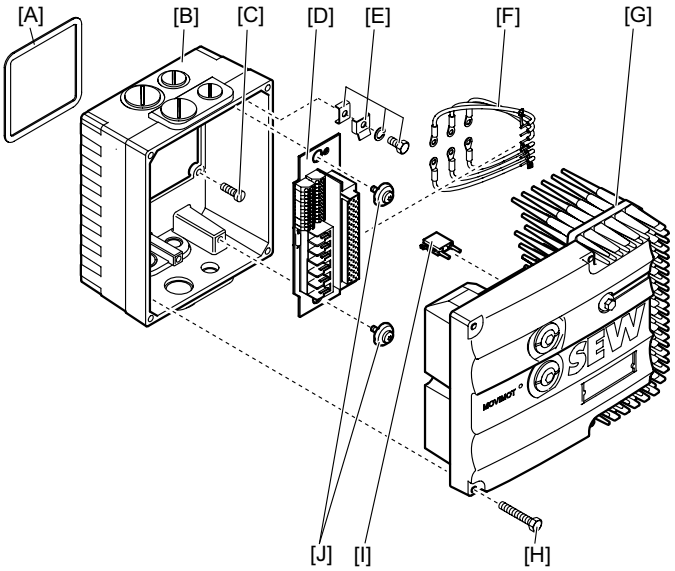

63246axx

[A]	Terminal box gasket	[E]	PE screw	[I]	Drive-ID module
[B]	Terminal box	[F]	Connection cable	[J]	2 screws
[C]	4 screws	[G]	Cover with inverter		
[D]	Connection board	[H]	4 screws		

Parts [B] and [D] to [J] are already installed in the delivery of the retrofit set.

STOP

- Only (brake) motors are allowed to be retrofitted with:
  - Rated motor voltage AC 230/400 V, 50 Hz
  - Rated brake voltage AC 230 V for MM03...MM15
    AC 120 V for MM22...MM40
- No retrofit sets are available for UL units.
- MOVIMOT® retrofit sets are configured to order. This is the reason why retrofit sets do not have a part number.

14.5.2 Retrofit sets for DRS motors

1400 rpm

Power [kW]	Motor	+ MOVIMOT® retrofit set	= MOVIMOT® drive
0.37	DRS71S4	MM03D, ⅄, DRS	DRS71S4/.../MM03D
0.55	DRS71M4	MM05D, ⅄, DRS	DRS71M4/.../MM05D
0.75	DRS80S4	MM07D, ⅄, DRS	DRS80S4/.../MM07D
1.1	DRS80M4	MM11D, ⅄, DRS	DRS80M4/.../MM11D
1.5	DRS90M4	MM15D, ⅄, DRS	DRS90M4/.../MM15D
2.2	DRS90L4	MM22D, ⅄, DRS	DRS90L4/.../MM22D
3.0	DRS100M4	MM30D, ⅄, DRS	DRS100M4/.../MM30D
4.0	DRS100LC4	MM40D, ⅄, DRS	DRS100LC4/.../MM40D

2900 rpm

Power [kW]	Motor	+ MOVIMOT® retrofit set	= MOVIMOT® drive
0.55	DRS71S4	MM05D, △, DRS	DRS71S4/.../MM05D
0.75	DRS71M4	MM07D, △, DRS	DRS71M4/.../MM07D
1.1	DRS80S4	MM11D, △, DRS	DRS80S4/.../MM11D
1.5	DRS80M4	MM15D, △, DRS	DRS80M4/.../MM15D
2.2	DRS90M4	MM22D, △, DRS	DRS90M4/.../MM22D
3.0	DRS90L4	MM30D, △, DRS	DRS90L4/.../MM30D
4.0	DRS100M4	MM40D, △, DRS	DRS100M4/.../MM40D

14.5.3 Retrofit sets for DRE motors

1400 rpm

Power [kW]	Motor	+ MOVIMOT® retrofit set	= MOVIMOT® drive
0.75	DRE80M4	MM07D, ⅄, DRE	DRE80M4/.../MM07D
1.1	DRE90M4	MM11D, ⅄, DRE	DRE90M4/.../MM11D
1.5	DRE90L4	MM15D, ⅄, DRE	DRE90L4/.../MM15D
2.2	DRE100M4	MM22D, ⅄, DRE	DRE100M4/.../MM22D
3.0	DRE100LC4	MM30D, ⅄, DRE	DRE100LC4/.../MM30D
4.0	DRE132S4	MM40D, ⅄, DRE	DRE132S4/.../MM40D

2900 rpm

Power [kW]	Motor	+ MOVIMOT® retrofit set	= MOVIMOT® drive
1.1	DRE80M4	MM11D, △, DRE	DRE80M4/.../MM11D
1.5	DRE90M4	MM15D, △, DRE	DRE90M4/.../MM15D
2.2	DRE90L4	MM22D, △, DRE	DRE90L4/.../MM22D
3.0	DRE100M4	MM30D, △, DRE	DRE100M4/.../MM30D
4.0	DRE100LC4	MM40D, △, DRE	DRE100LC4/.../MM40D

14.5.4 Retrofit sets for DRP motors

1400 rpm

Power [kW]	Motor	+ MOVIMOT® retrofit set	= MOVIMOT® drive
0.75	DRP90M4	MM07D, ⅄, DRP	DRP90M4/.../MM07D
1.1	DRP90L4	MM11D, ⅄, DRP	DRP90L4/.../MM11D
1.5	DRP100M4	MM15D, ⅄, DRP	DRP100M4/.../MM15D
2.2	DRP100L4	MM22D, ⅄, DRP	DRP100L4/.../MM22D
3.0	DRP112M4	MM30D, ⅄, DRP	DRP112M4/.../MM30D
4.0	DRP132M4	MM40D, ⅄, DRP	DRP132M4/.../MM40D

2900 rpm

Power [kW]	Motor	+ MOVIMOT® retrofit set	= MOVIMOT® drive
1.1	DRP90M4	MM11D, △, DRP	DRP90M4/.../MM11D
1.5	DRP90L4	MM15D, △, DRP	DRP90L4/.../MM15D
2.2	DRP100M4	MM22D, △, DRP	DRP100M4/.../MM22D
3.0	DRP100L4	MM30D, △, DRP	DRP100L4/.../MM30D
4.0	DRP112M4	MM40D, △, DRP	DRP112M4/.../MM40D

14.5.5 Braking resistor for motors without brake

For motors without mechanical brake, we recommend to connect an integrated braking resistor BW.. . The braking resistor is not included in the scope of delivery of the retrofit set and must be ordered separately:

MOVIMOT® type	Braking resistor	Part number
MM03D-503-00...MM15D-503-00 MM03D-233-00...MM07D-233-00	BW1	0 822 897 3[1)]
MM22D-503-00...MM40D-503-00 MM11D-233-00...MM22D-233-00	BW2	0 823 136 2[1)]

1) Two screws M4 x 8, included in scope of delivery

14.6 Dimension sheets

Dimension sheet information

Please observe the following notes regarding the dimension sheets for MOVIMOT® AC motors (DR):

- Foot-mounted motors are available with terminal box position 270° only.
- A fan guard represented by a dotted line shows the design with brake.
- Different positions are possible for the manual brake release. The four positions 33°, 123°, 213° or 303° are basically possible.

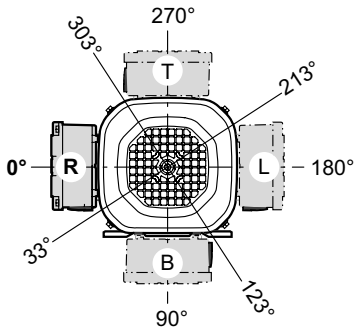

61011axx

- The manual brake release is located at an angle of 303° to the terminal box as standard. The manual brake release can be turned by 4 × 90°. The forced cooling fan option (/V) limits the possible positions of the manual brake release.
- For brake motors do not forget to add the space required for removing the fan guard (= fan guard diameter).
- Leave a clearance of at least half the fan guard diameter to provide unhindered air access.
- The motor dimensions may change when installing motor options. Refer to the dimension drawings of the motor options.

DRS71S/FI/MM-D..

80 152 00 07
Bl. 1 (2)

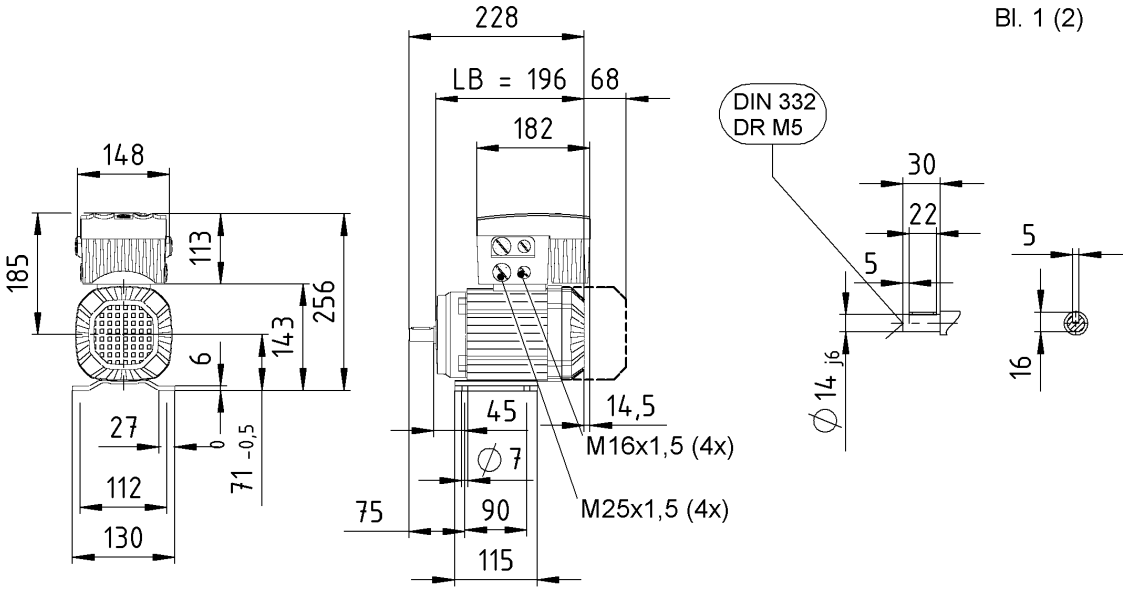

/FF/MM-D..

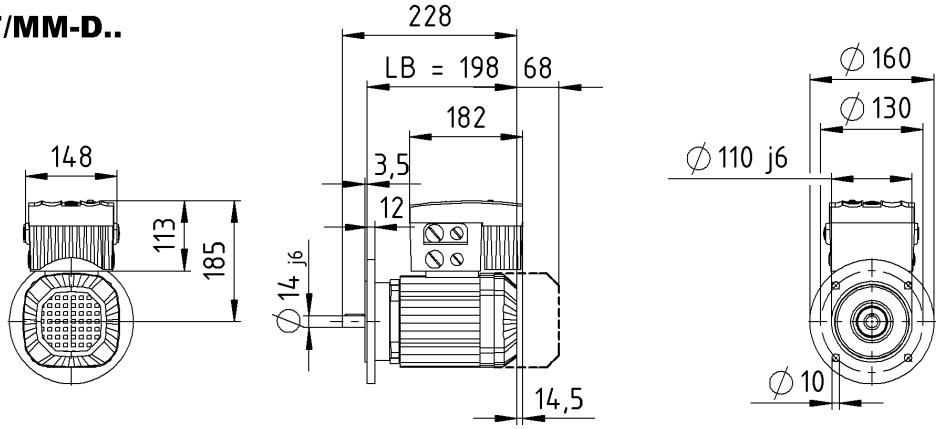

/C/MM-D..

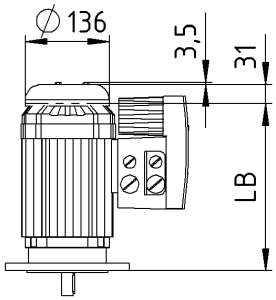

/2W/MM-D..

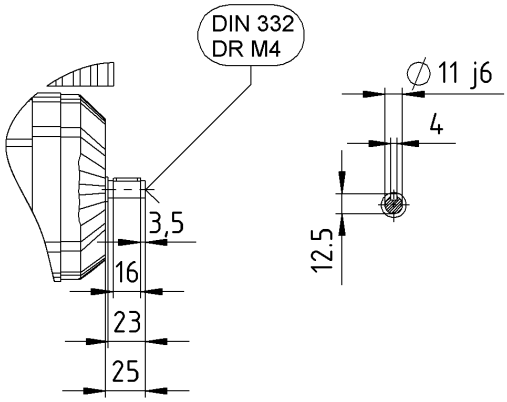

DRS71S/MM-D..

80 152 00 07
Bl. 2 (2)

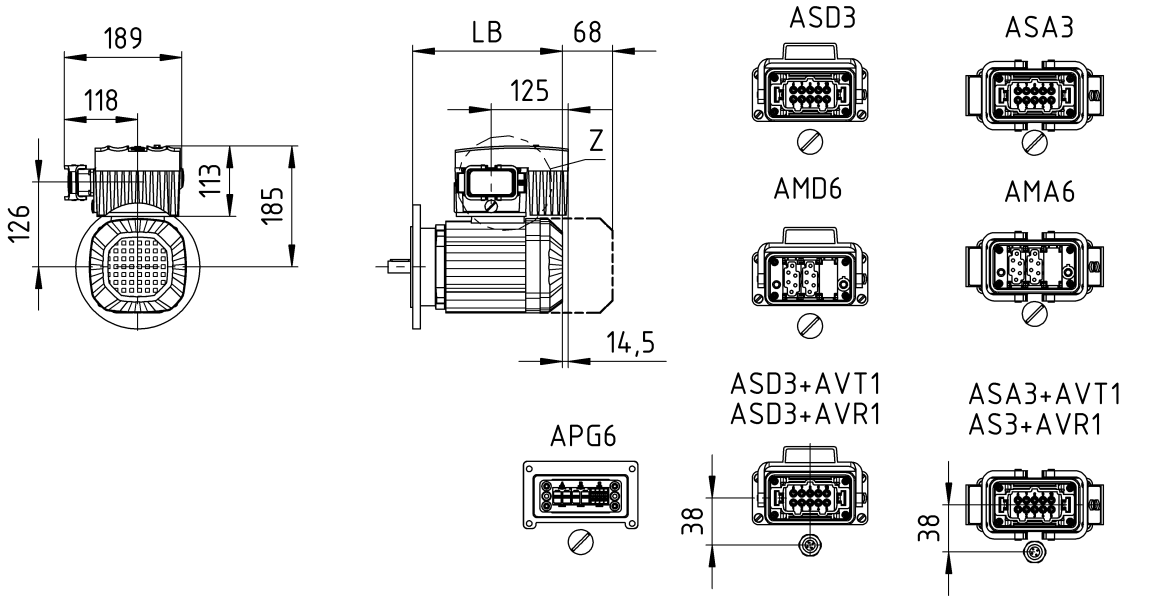

/EI7./MM-D..

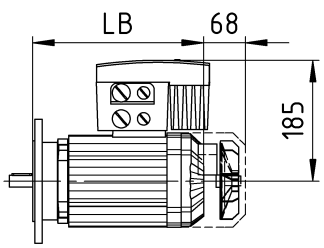

/MM-D../AVT1
/AVR1

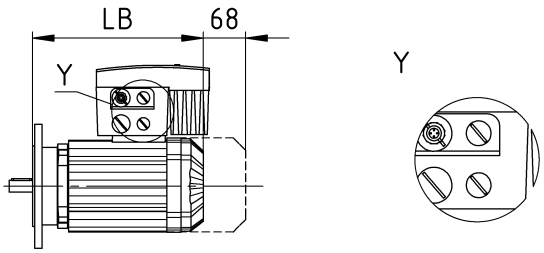

/V/MM-D..

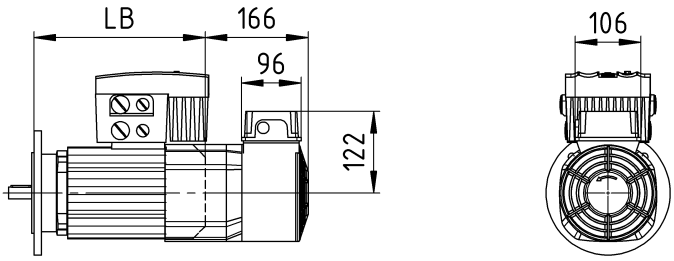

DRS71M/FI/MM-D..

80 151 00 07
Bl. 1 (2)

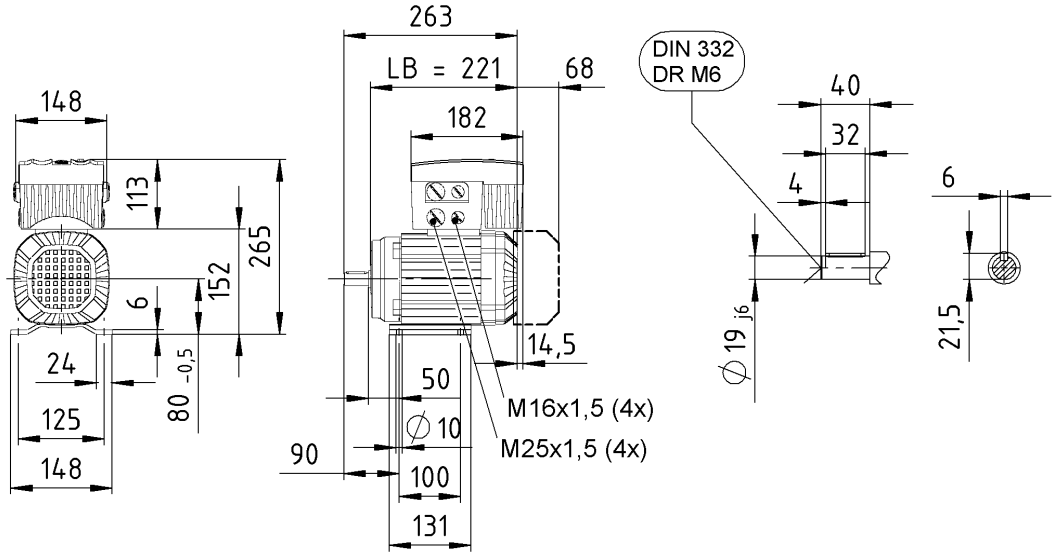

/FF/MM-D..

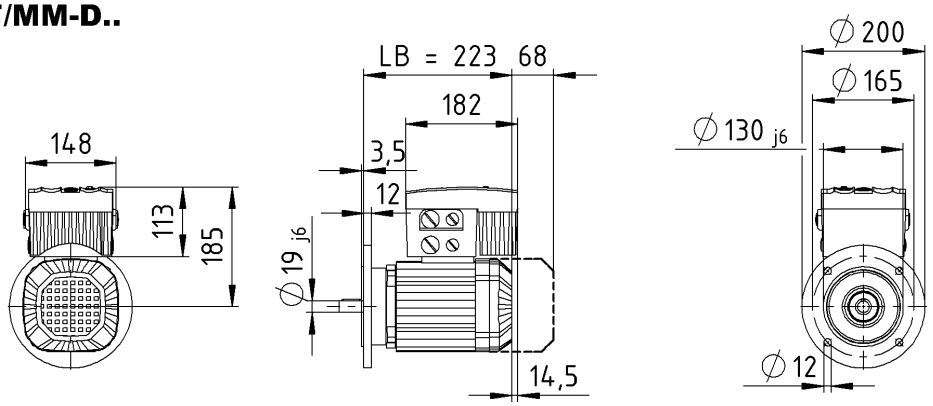

/C/MM-D..

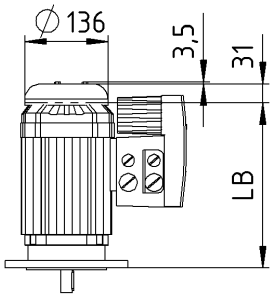

/2W/MM-D..

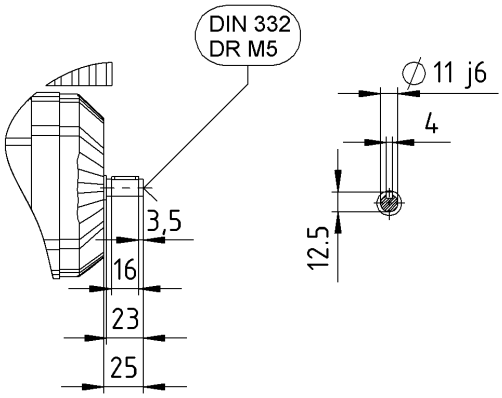

DRS71M/MM-D..

80 151 00 07
Bl. 2 (2)

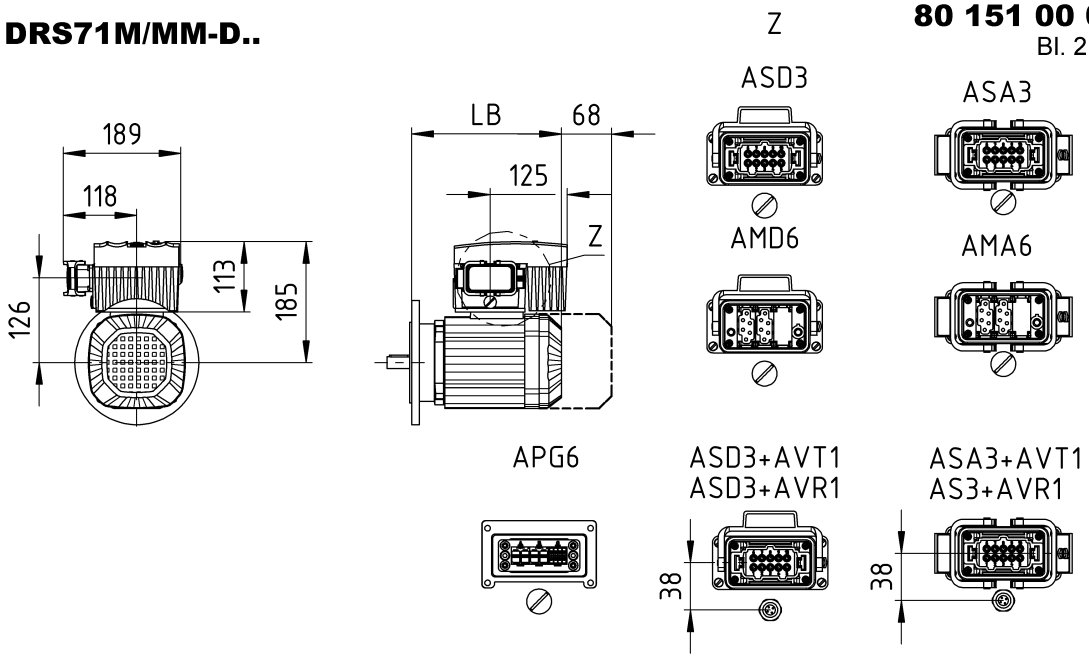

/EI7./MM-D..

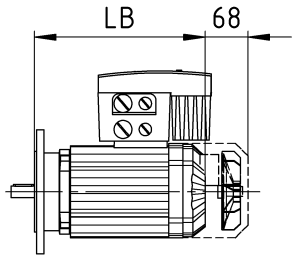

/MM-D../AVT1
/AVR1

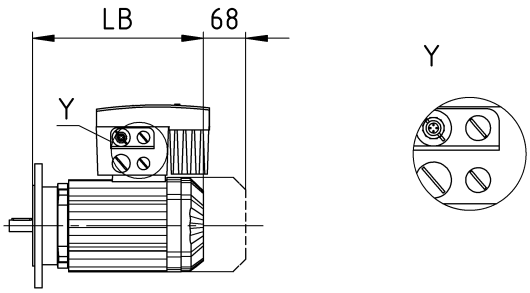

/V/MM-D..

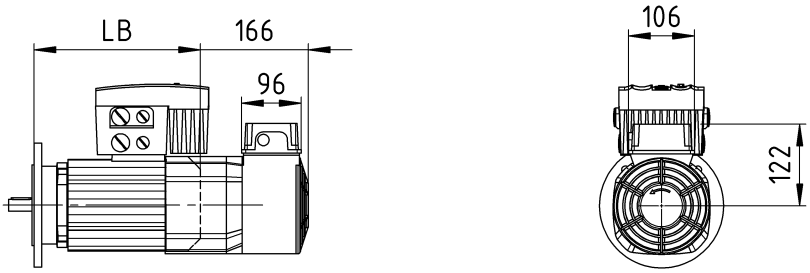

DRS80S/FI/MM-D..

80 153 00 07
Bl. 1 (2)

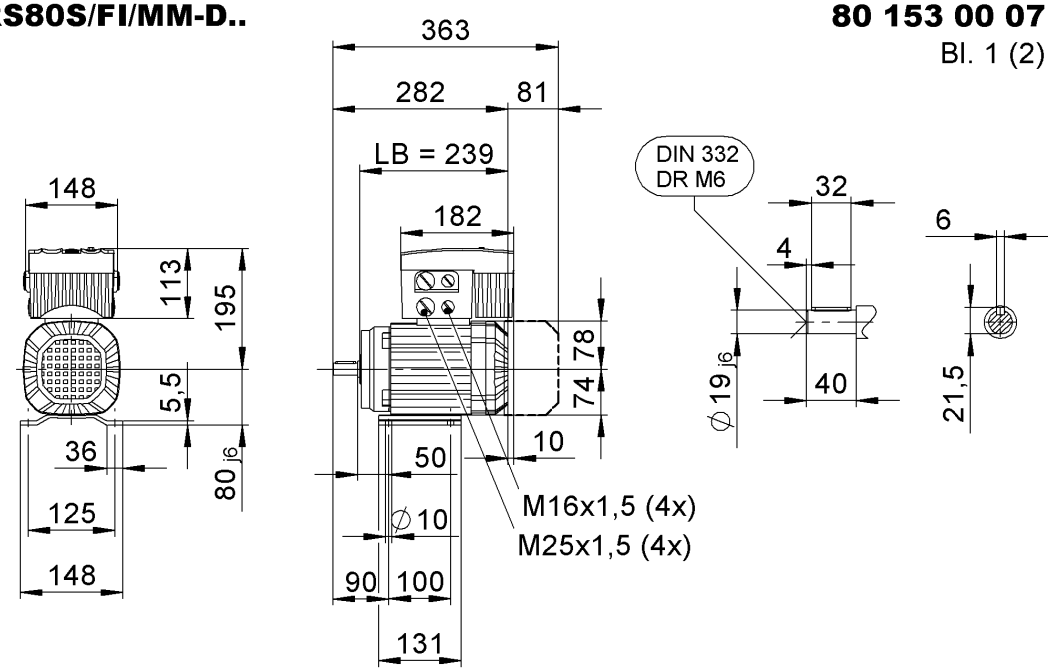

/FF../MM-D..

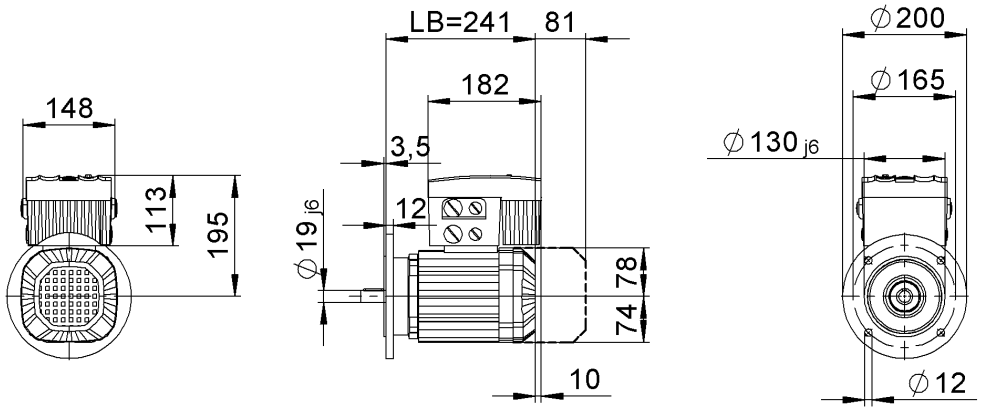

/C/MM-D..

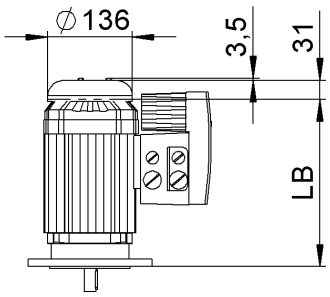

/2W/MM-D..

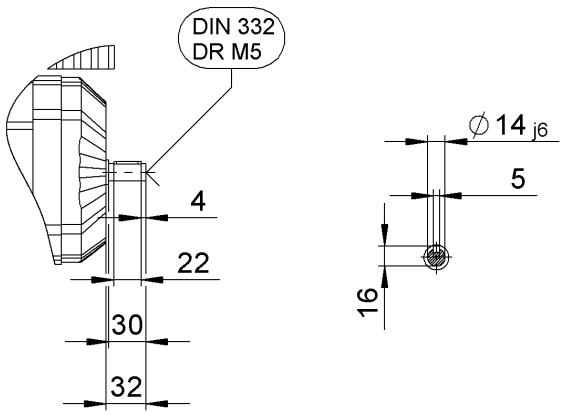

DRS80S/MM-D..

80 153 00 07
Bl. 2 (2)

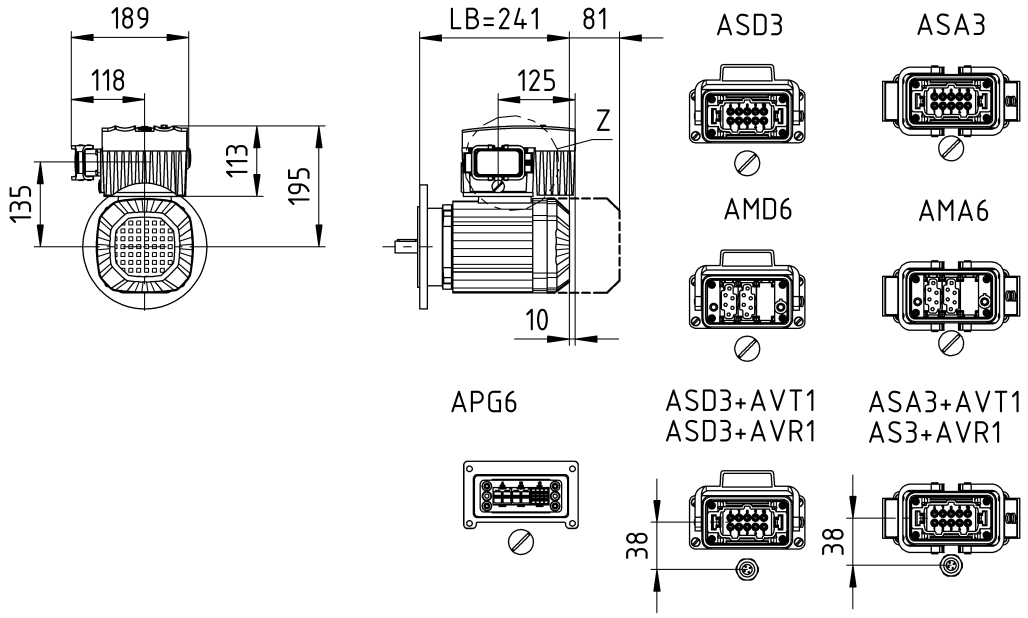

/EI7./MM-D..

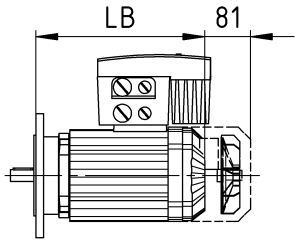

/MM-D../AVT1
/AVR1

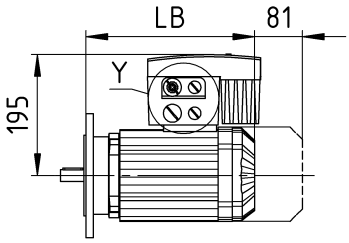

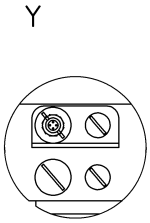

/V/MM-D..

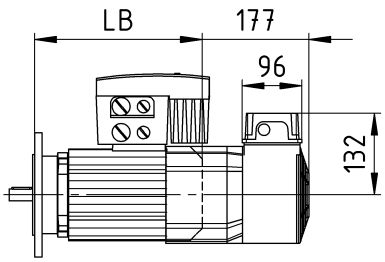

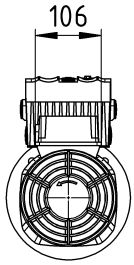

DRS80M/FI../MM-D..

80 154 00 07
Bl. 1 (2)

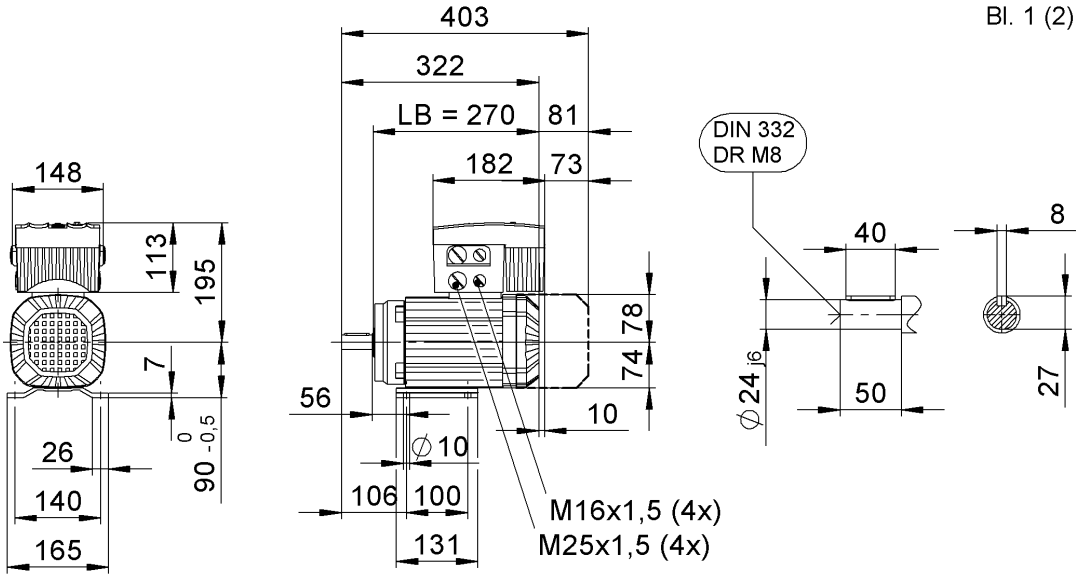

/FF../MM-D..

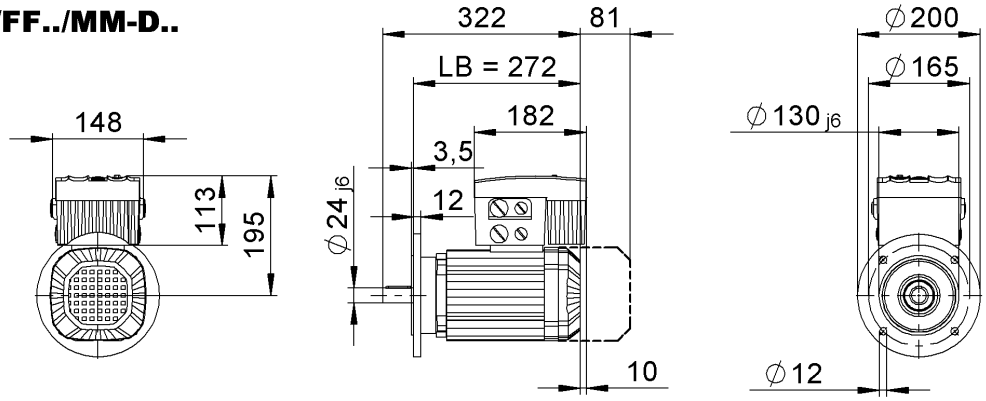

/C/MM-D..

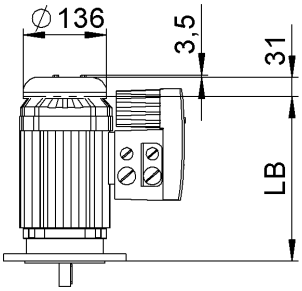

/2W/MM-D..

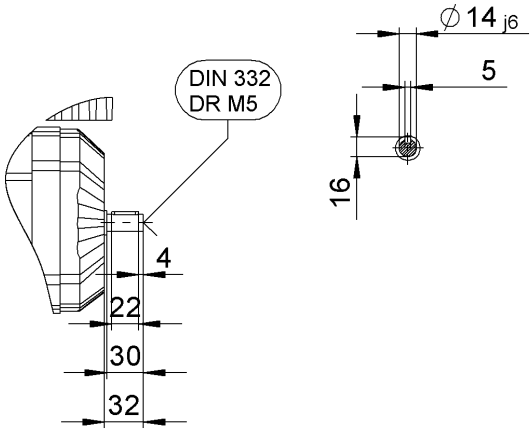

DRS80M/MM-D..

80 154 00 07
Bl. 2 (2)

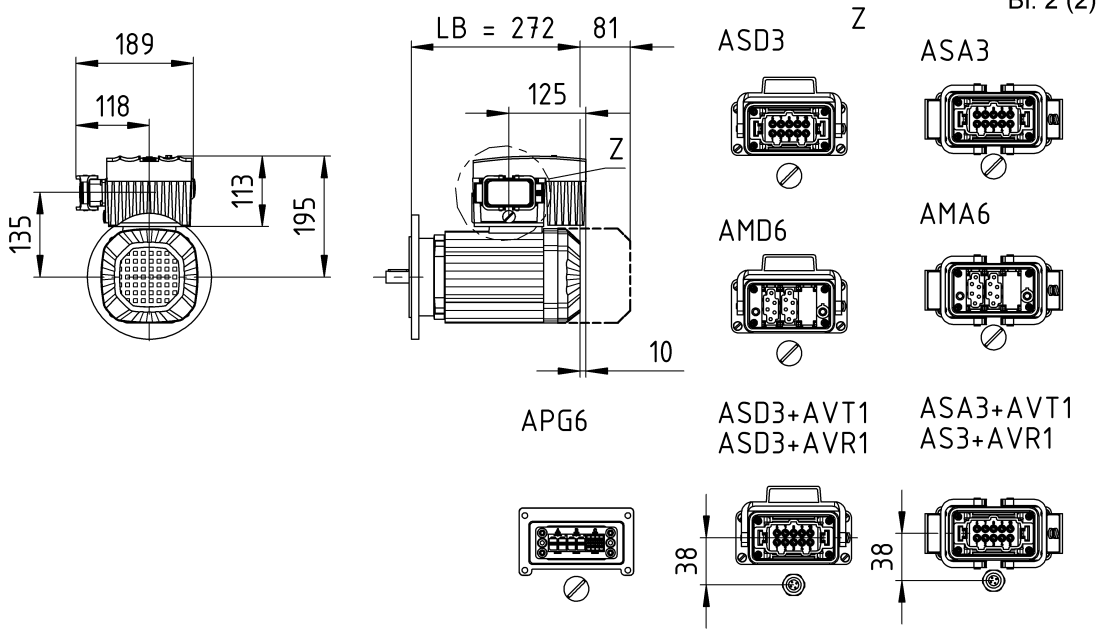

/EI7./MM-D..

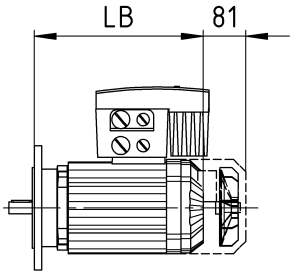

/MM-D../AVT1
/AVR

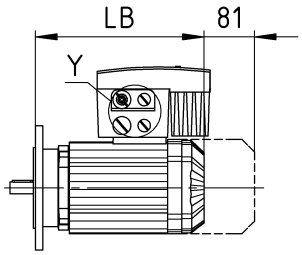

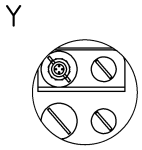

/V/MM-D..

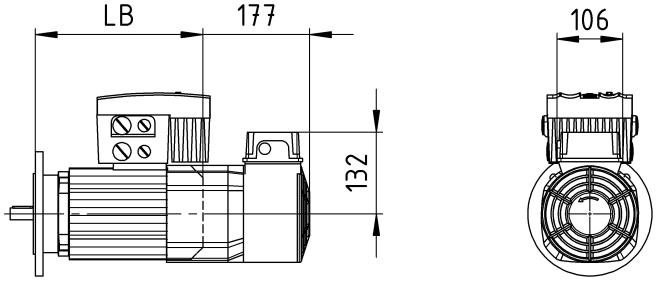

DRE/DRP80M/FI/MM-D..

80 155 00 07
Bl. 1 (2)

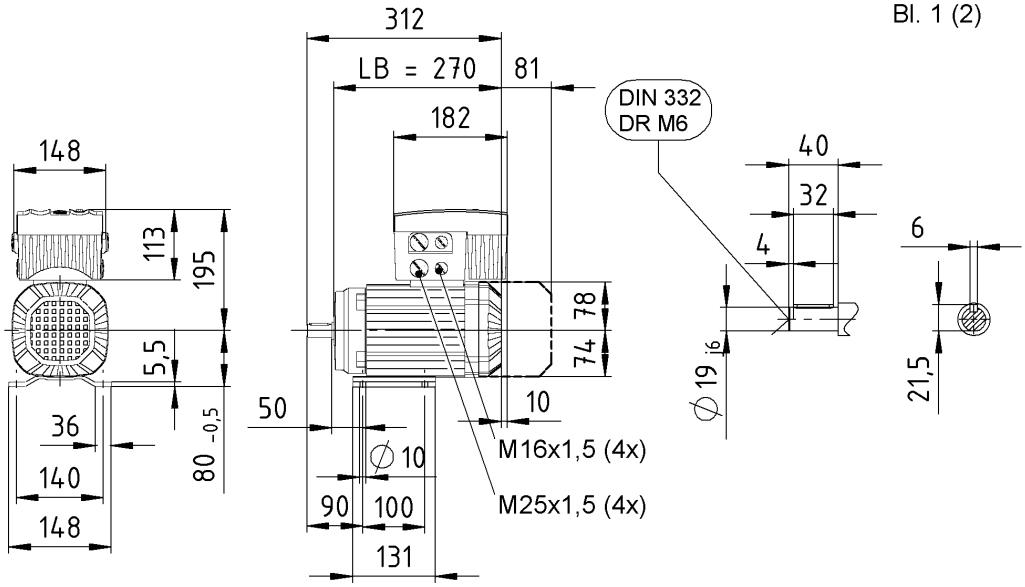

/FF/MM-D..

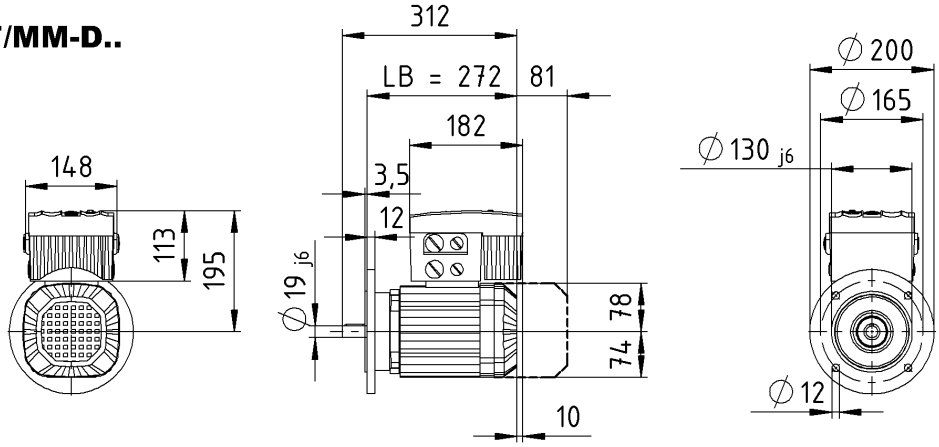

/C/MM-D..

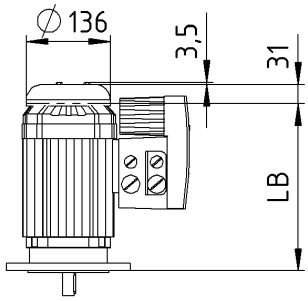

/2W/MM-D..

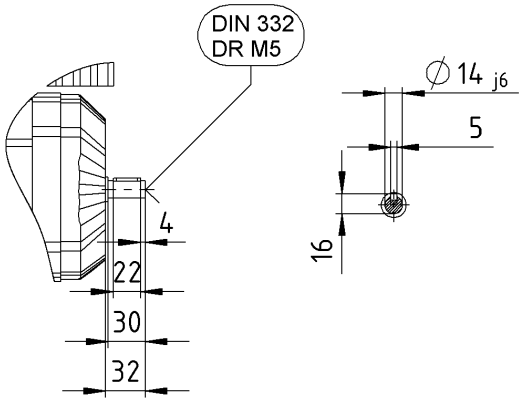

DRE/DRP80M/MM-D..

80 155 00 07
Bl. 2 (2)

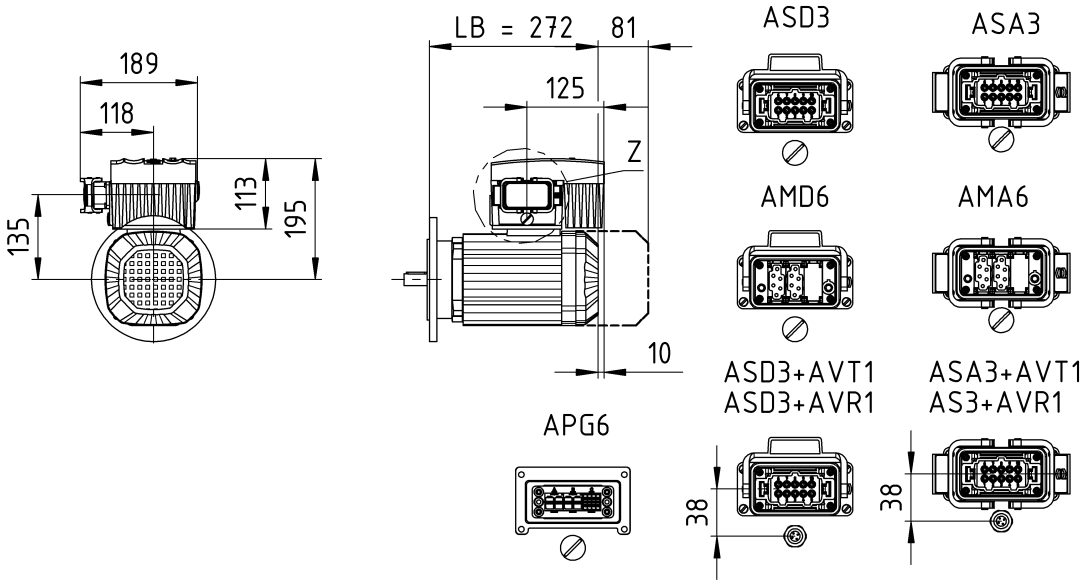

/EI7./MM-D..

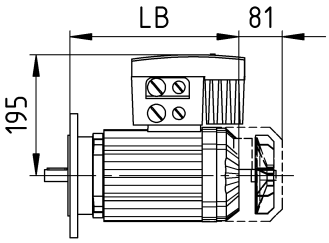

/MM-D../AVT1
/AVR1

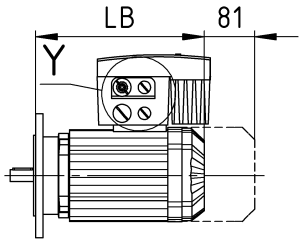

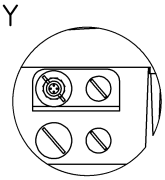

/V/MM-D..

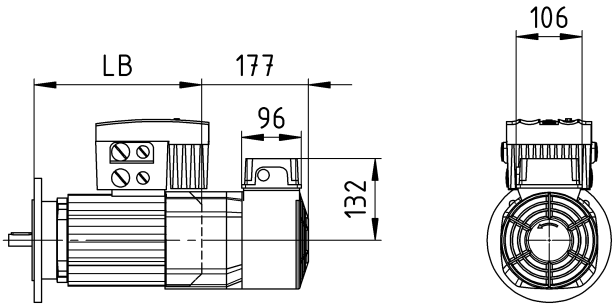

DRS80M/FI../MM-D.. (MM22)

80 156 00 07
Bl. 1 (2)

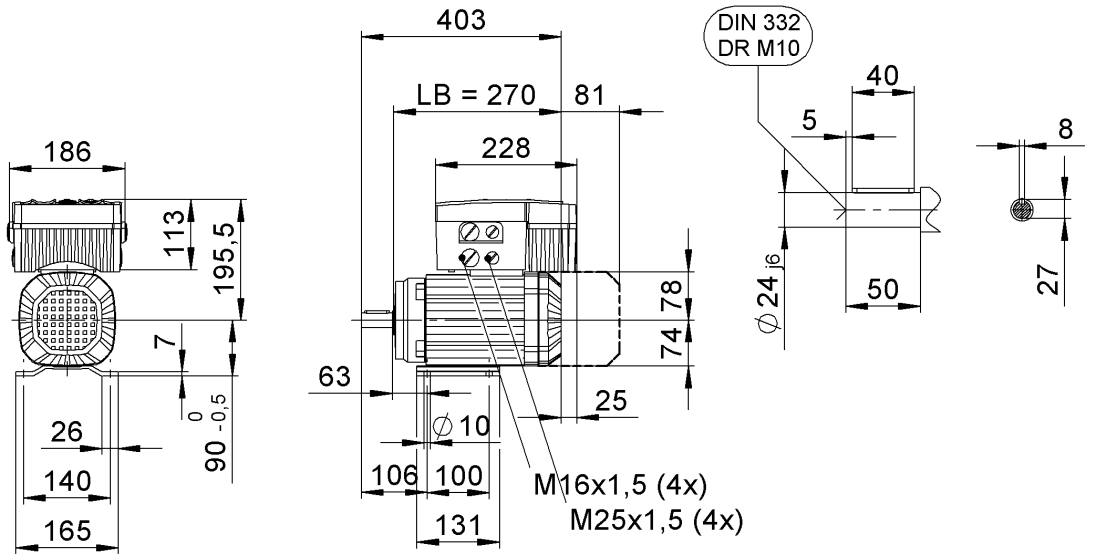

/FF../MM-D..

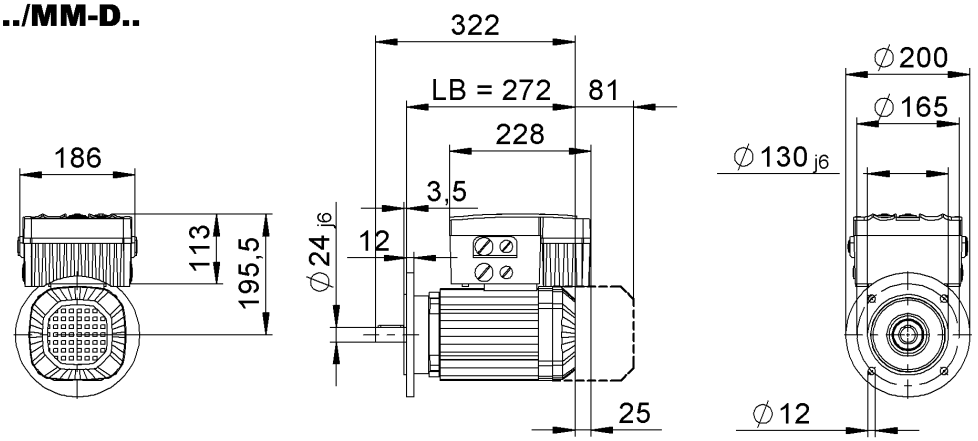

/C/MM-D..

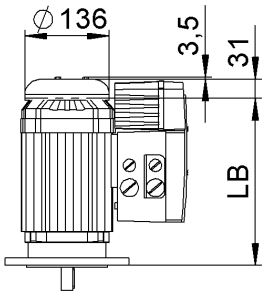

/2W/MM-D..

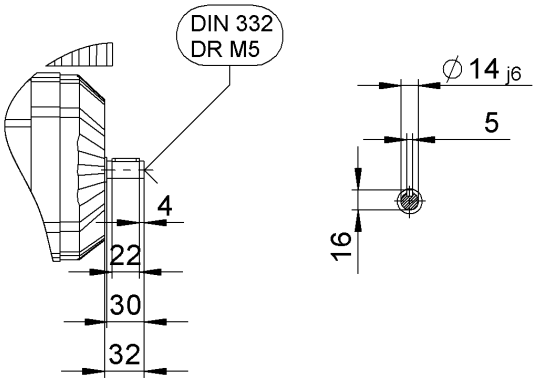

DRS80M/MM-D.. (MM22) **80 156 00 07**
Bl. 2 (2)

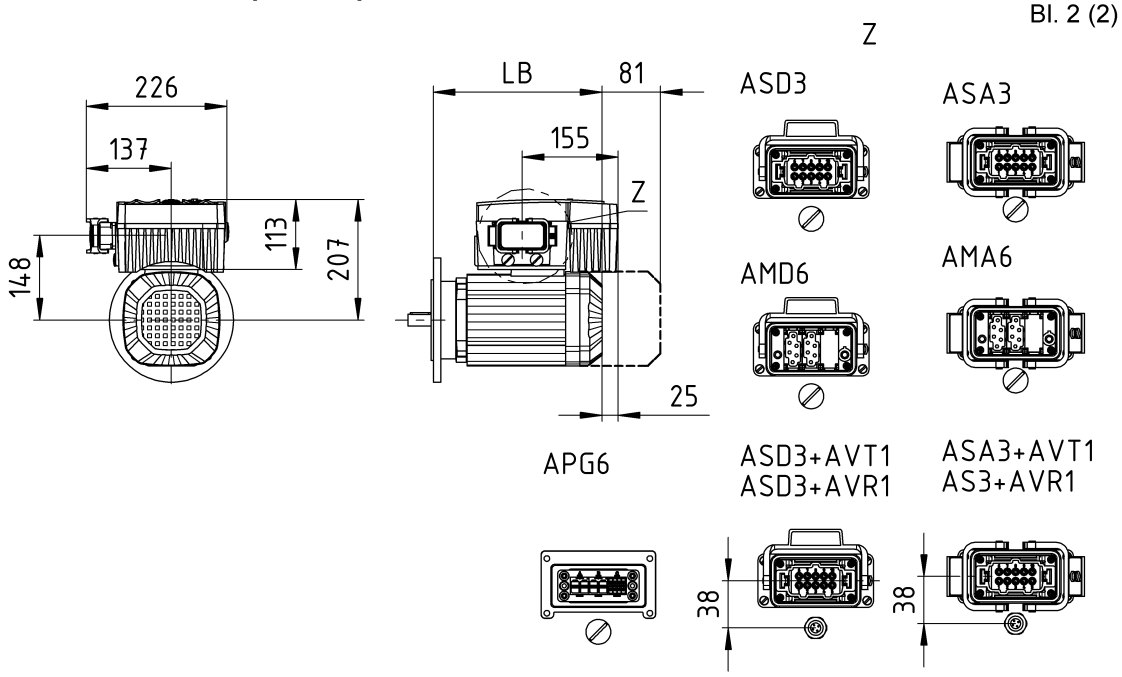

/EI7./MM-D..

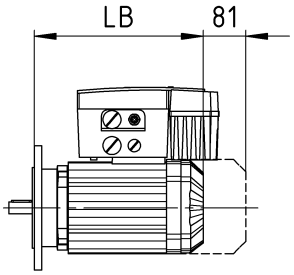

/MM-D../AVT1
/AVR

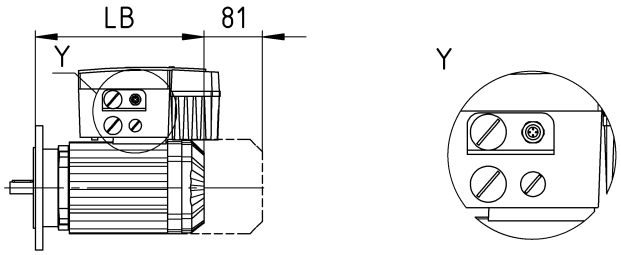

/V/MM-D..

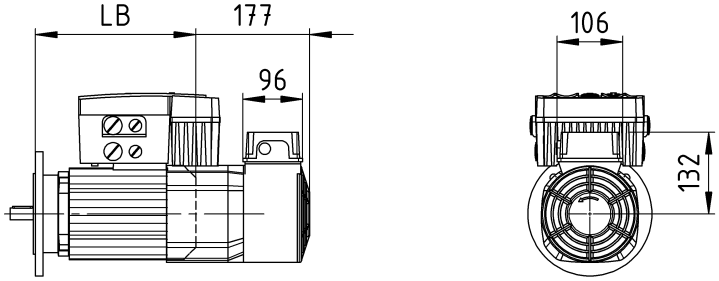

DRS90M/FI../MM-D.. (MM15)

80 157 00 07
Bl. 1 (2)

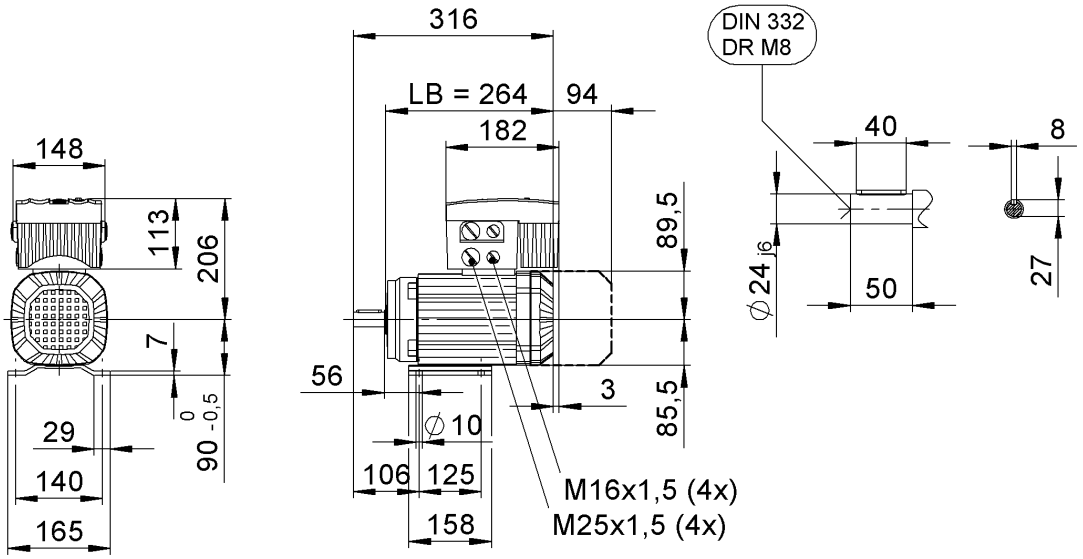

/FF../MM-D..

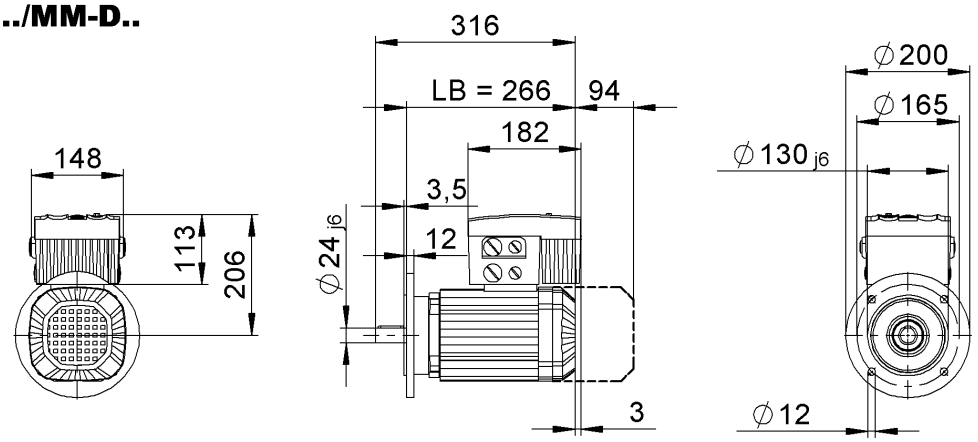

/C/MM-D..

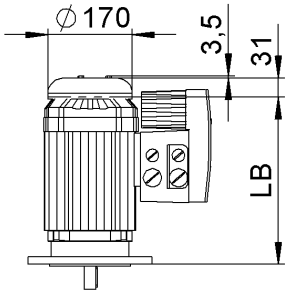

/2W/MM-D..

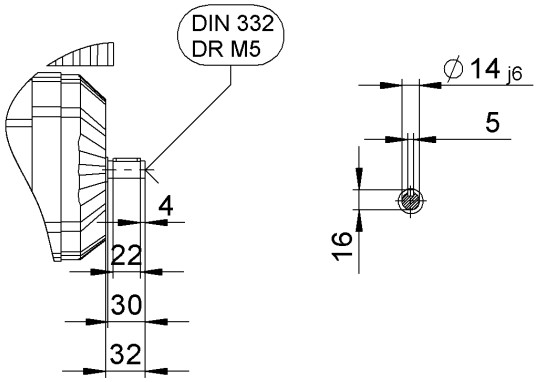

DRS90M/MM-D.. (MM15)

80 157 00 07
Bl. 2 (2)

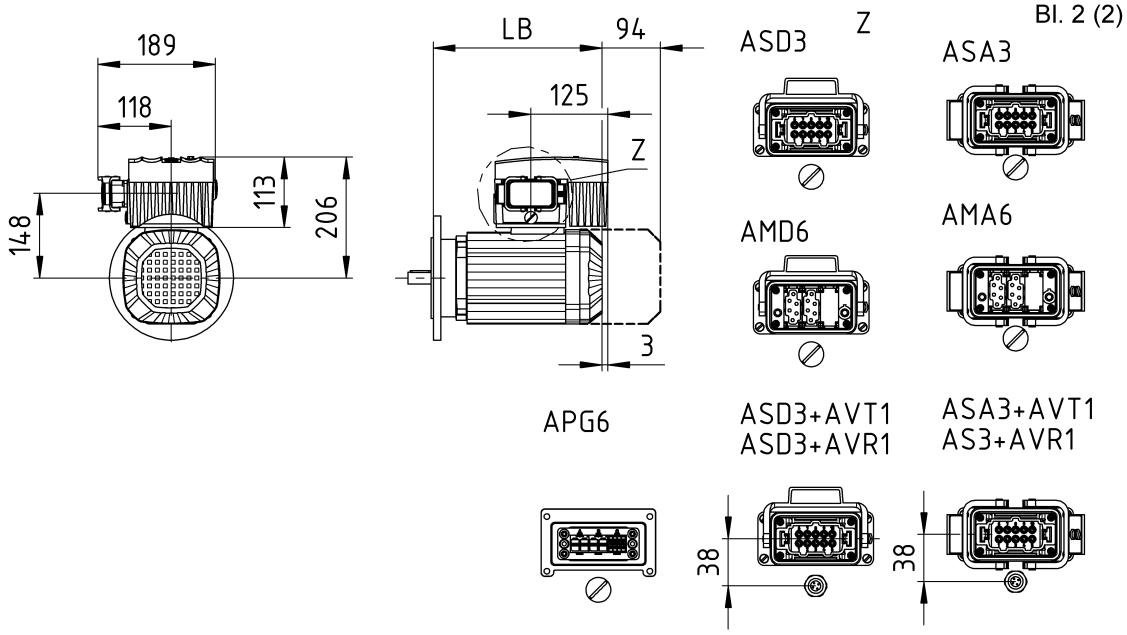

/EI7./MM-D..

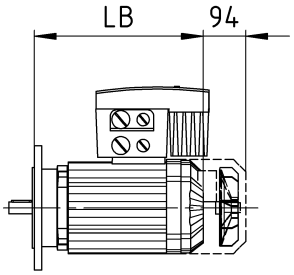

/MM-D../AVT1
/AVR

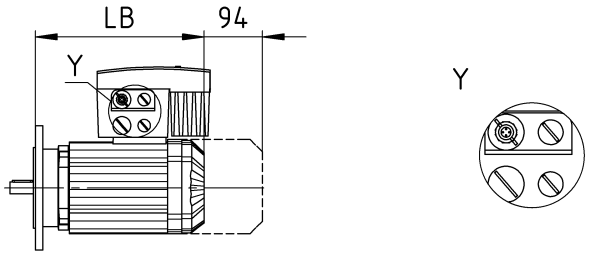

/V/MM-D..

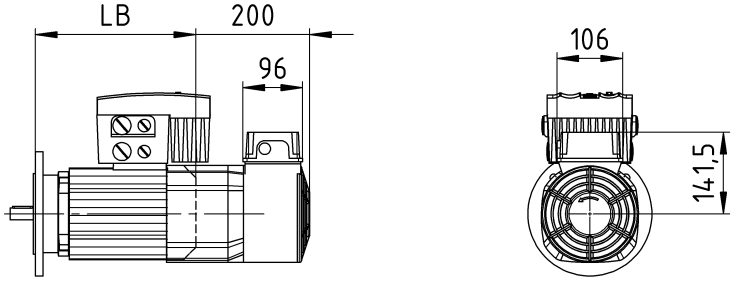

DRE/DRP90M,L/FI../MM-D.. (MM07-15)

80 158 00 07
Bl. 1 (2)

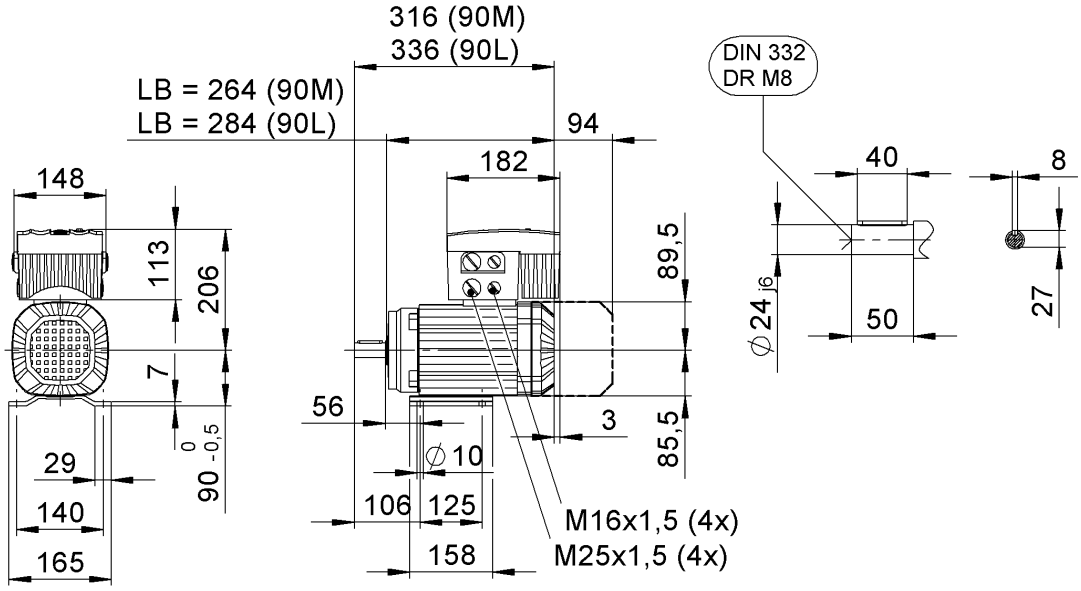

/FF../MM-D..

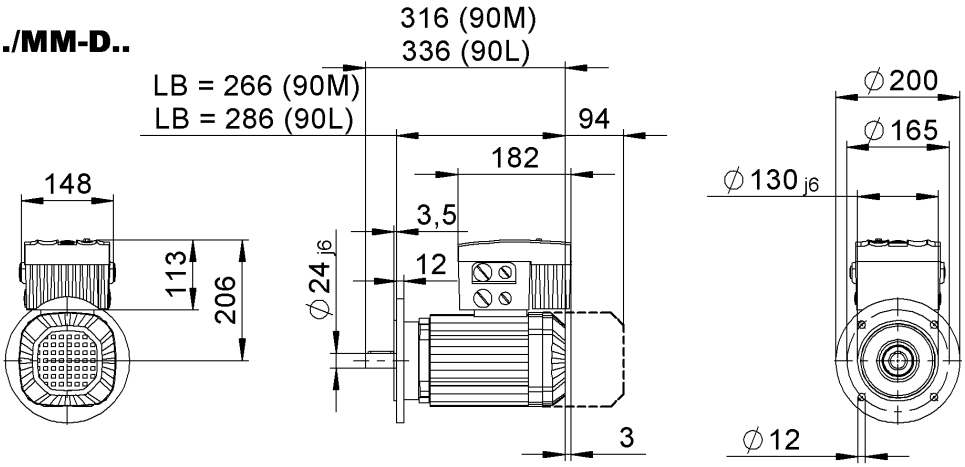

/C/MM-D..

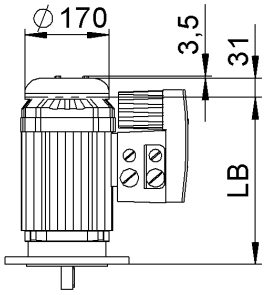

/2W/MM-D..

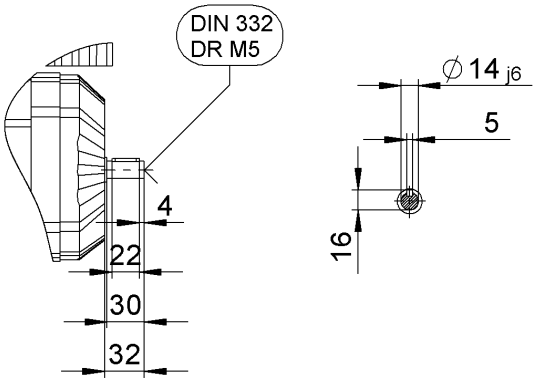

DRE/DRP90M,L/MM-D.. **80 158 00 07**

Z Bl. 2 (2)

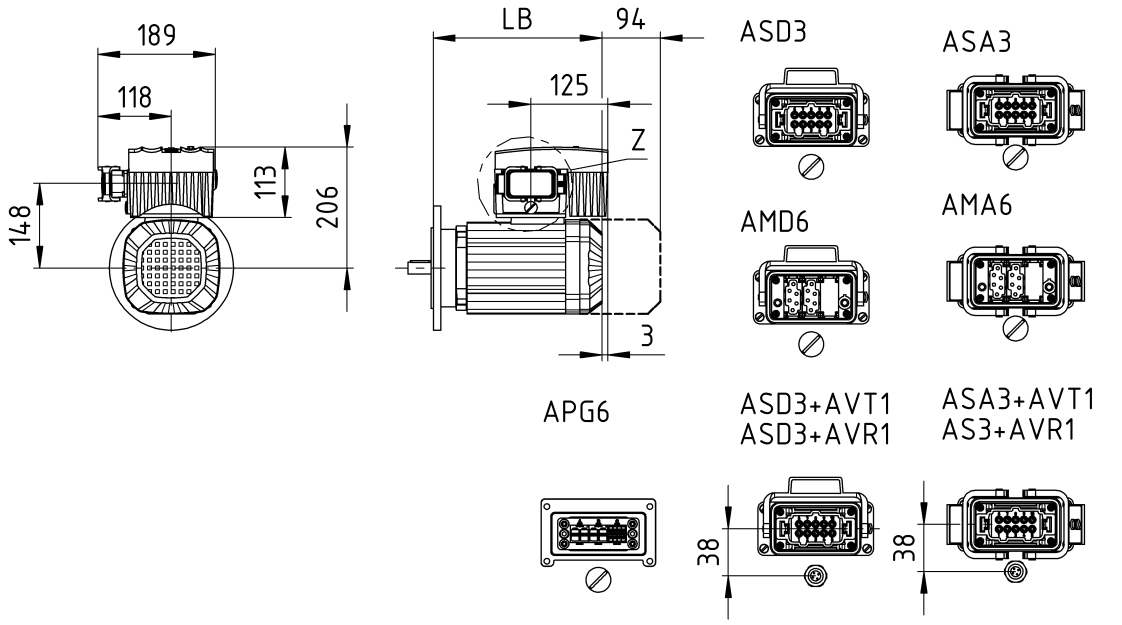

/EI7./MM-D.. **/MM-D../AVT1 /AVR**

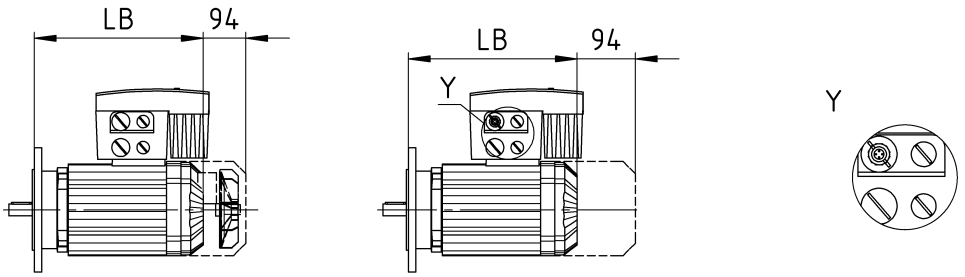

/V/MM-D..

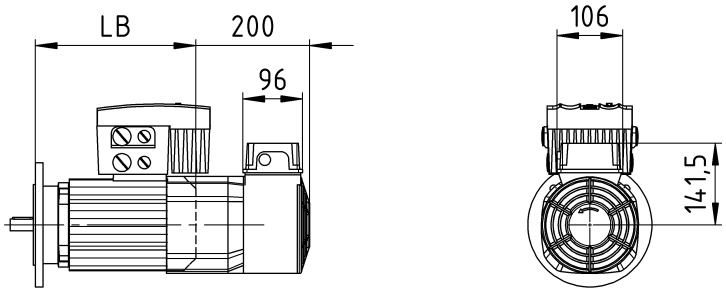

DRS100LC/FI../MM-D..

80 159 00 07
Bl. 1 (2)

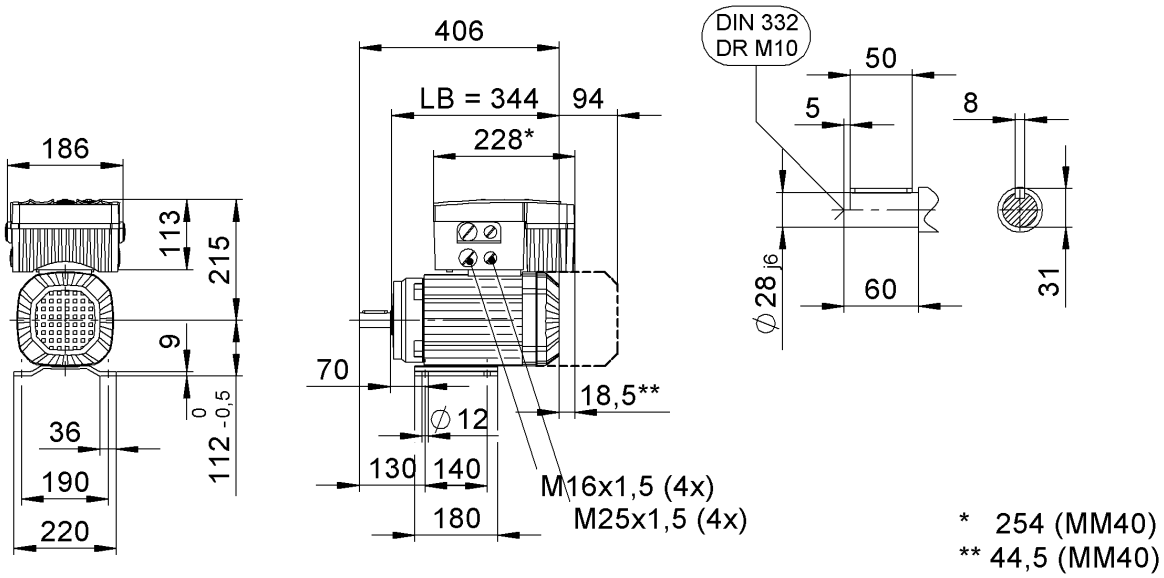

/FF../MM-D..

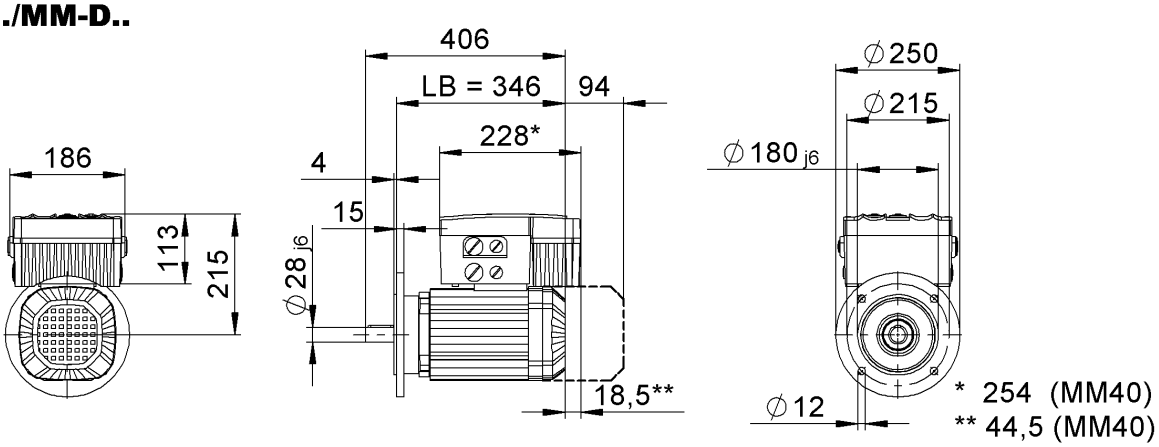

/C/MM-D..

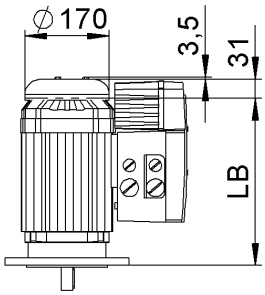

/2W/MM-D..

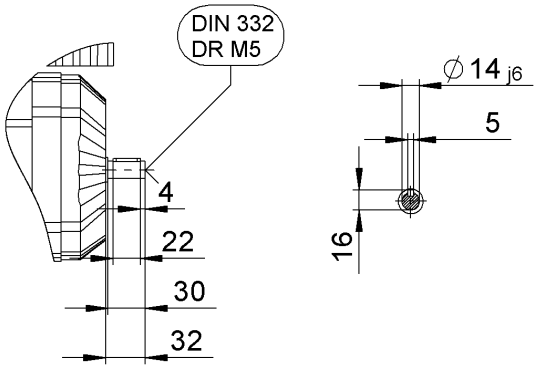

DRS100LC/MM-D.. **80 159 00 07**
Bl. 2 (2)

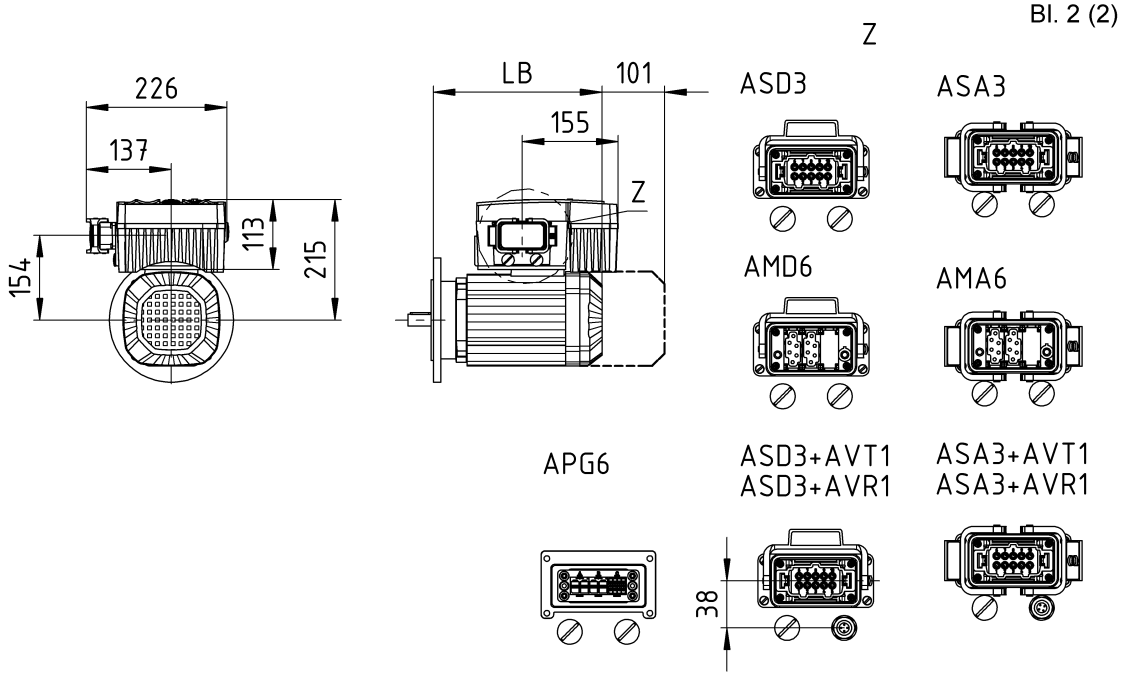

/EI7./MM-D..

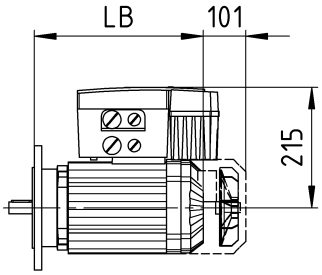

/MM-D../AVT1
/AVR

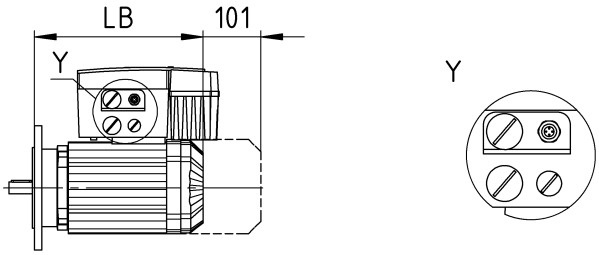

/V/MM-D..

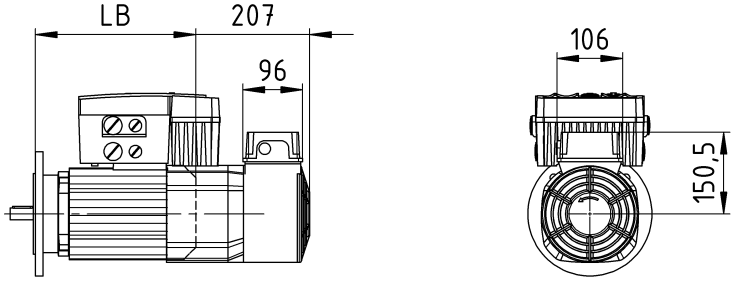

DRS100M,L/FI../MM-D..
DRE/DRP100M,L,LC/FI../MM-D..

80 160 00 07
Bl. 1 (2)

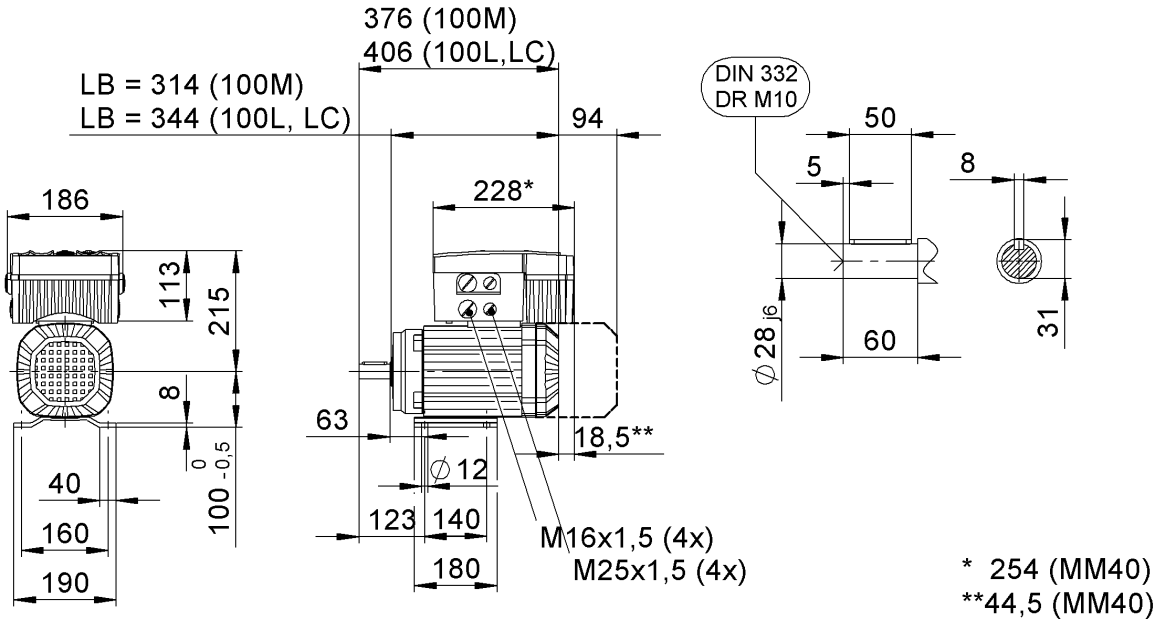

/FF../MM-D..

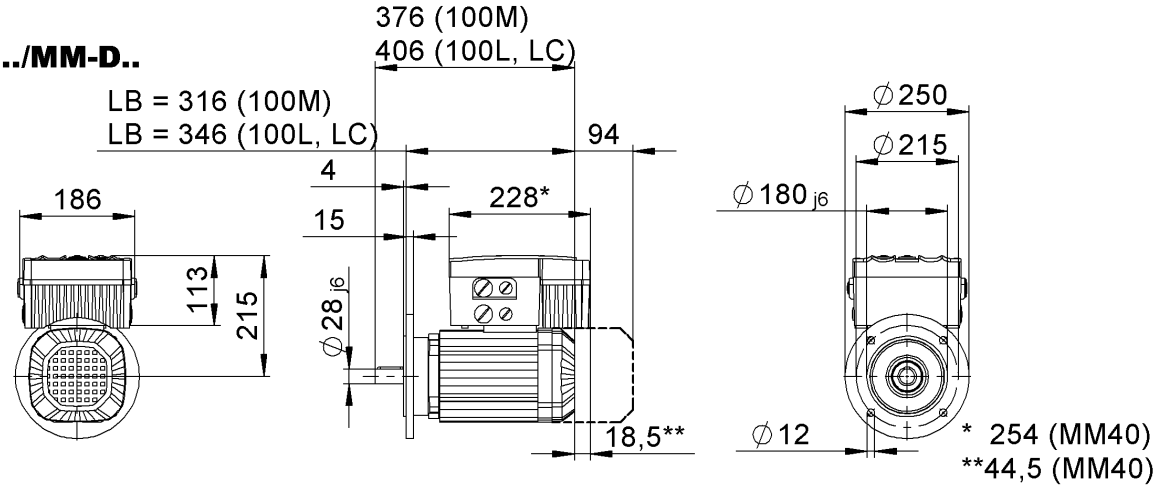

/C/MM-D..

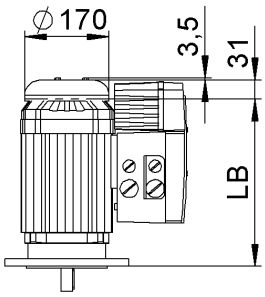

/2W/MM-D..

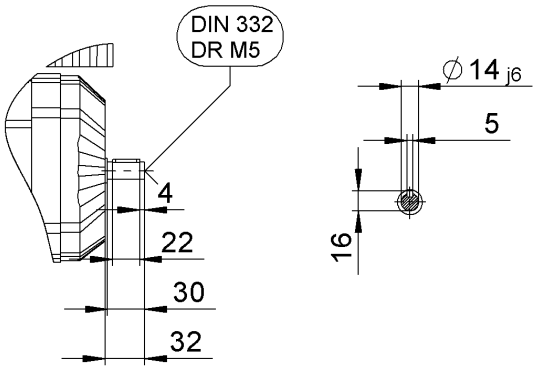

DRS100M,L/MM-D..
DRE/DRP100M,L,LC/R../MM-D..

80 160 00 07
Bl. 2 (2)

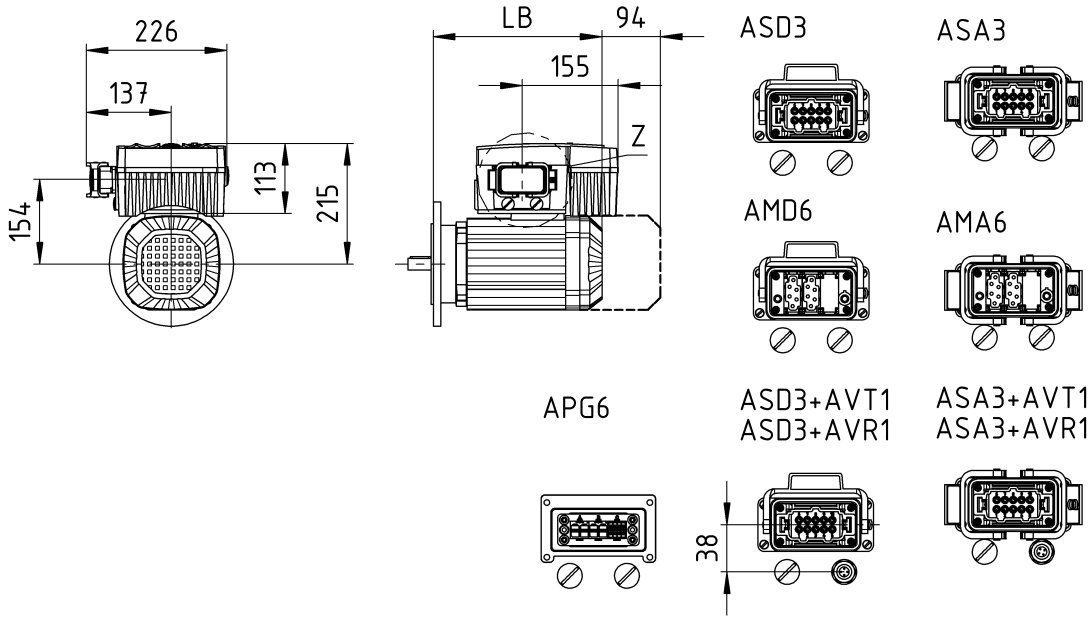

/EI7./MM-D..

/MM-D../AVT1
/AVR

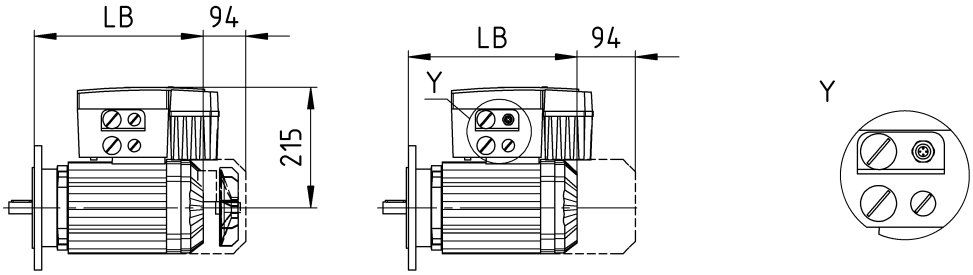

/V/MM-D..

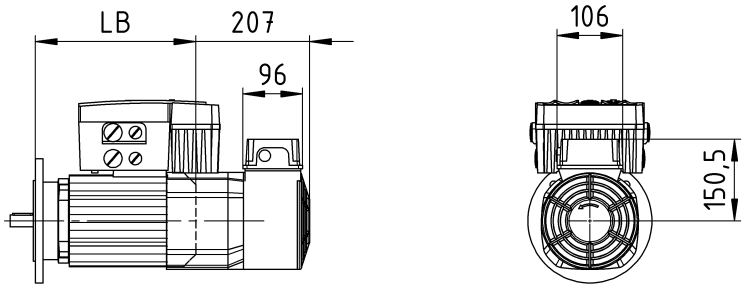

DRE/DRP112M/FI../MM-D..

80 162 00 07
Bl. 1 (2)

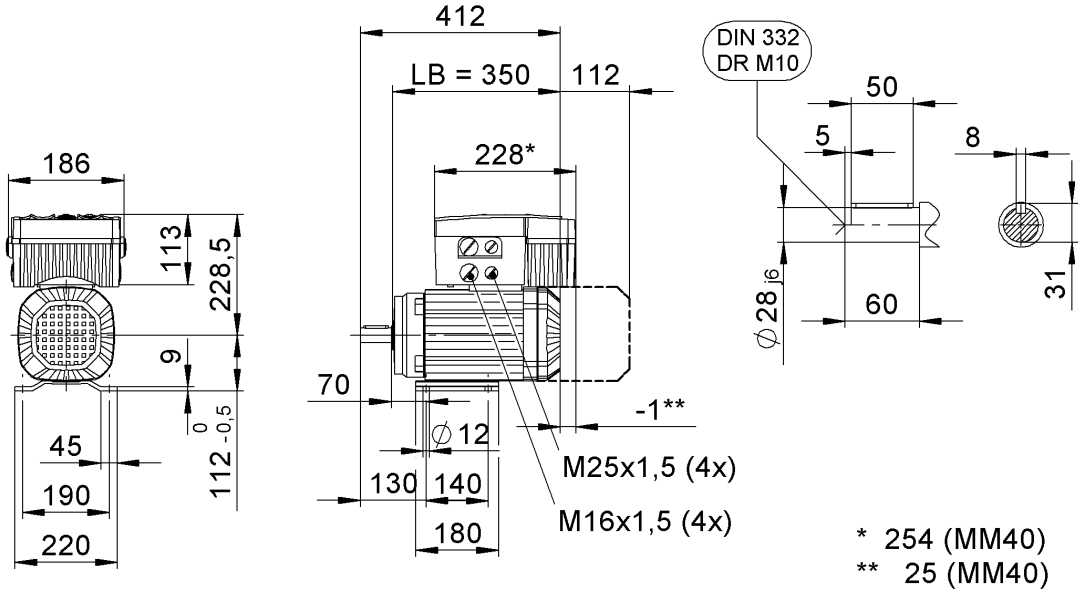

/FF../MM-D..

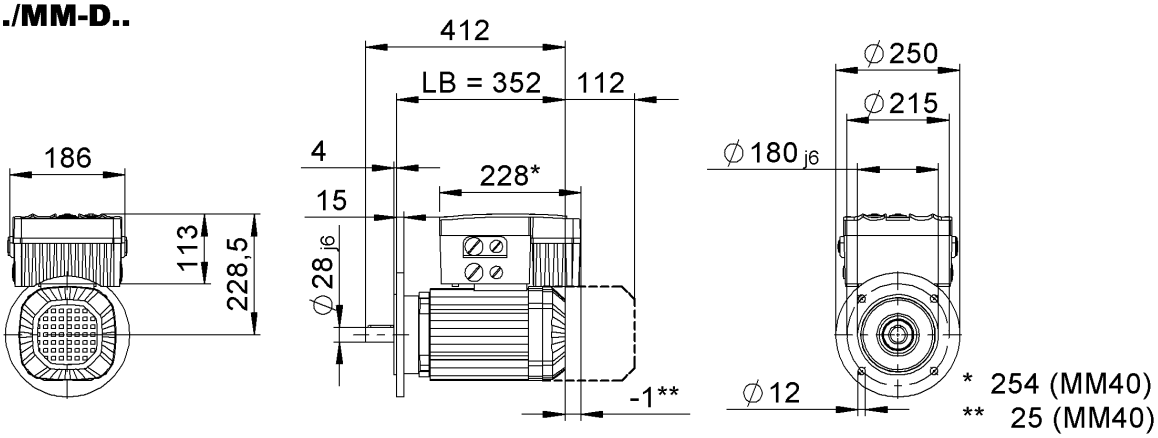

/C/MM-D..

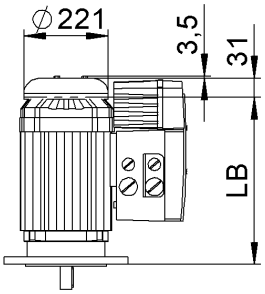

/2W/MM-D..

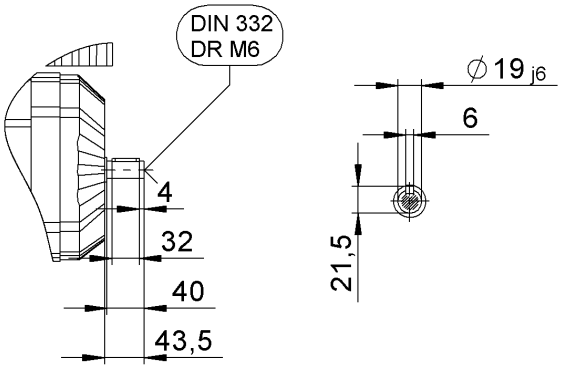

DRE/DRP112M/MM-D.. **80 162 00 07**
Bl. 2 (2)

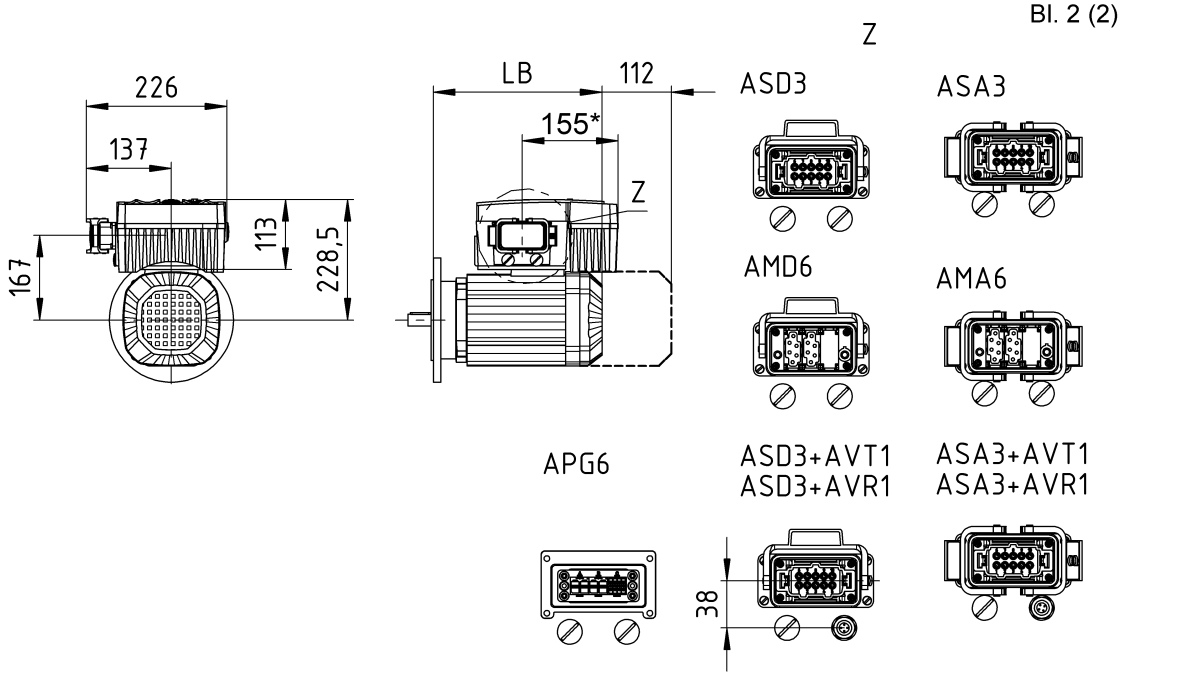

* 181 (MM40)

/EI7./MM-D..

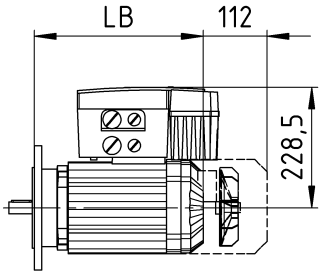

/MM-D../AVT1
/AVR

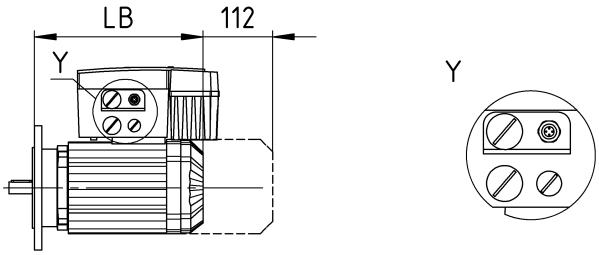

/V/MM-D..

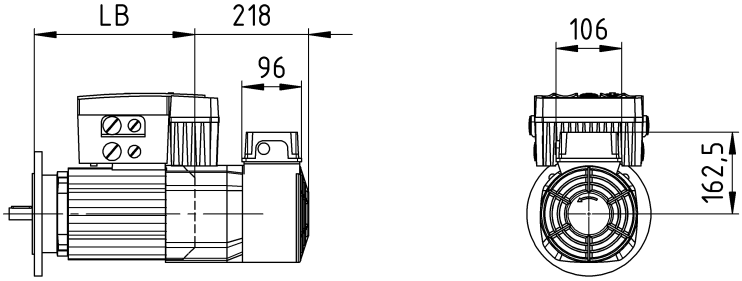

DRS132S/FI../MM-D..

80 163 00 07
Bl. 1 (2)

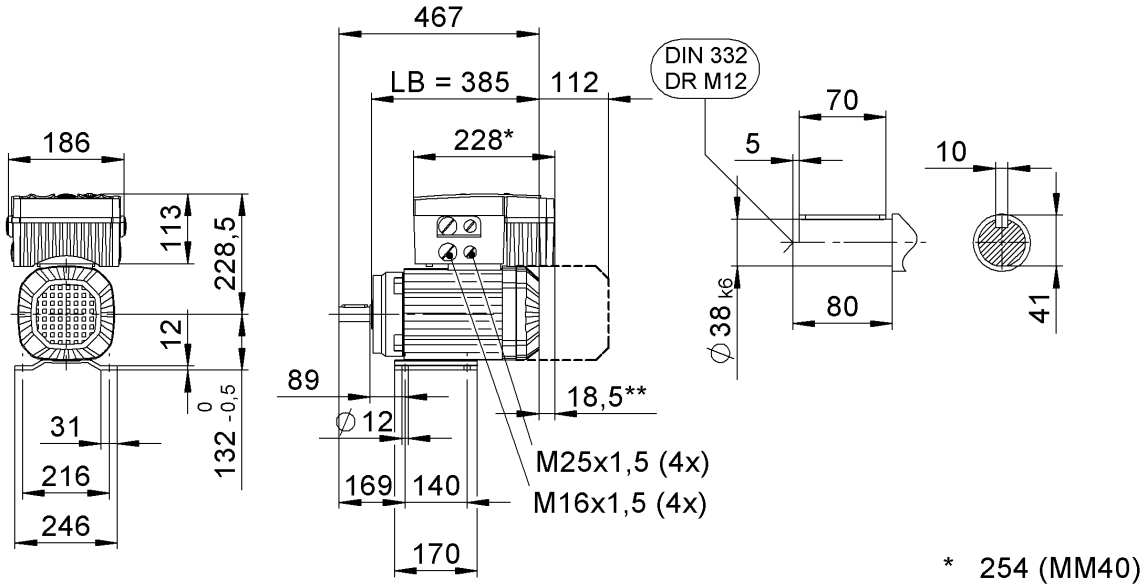

* 254 (MM40)
** 44,5 (MM40)

/FF../MM-D..

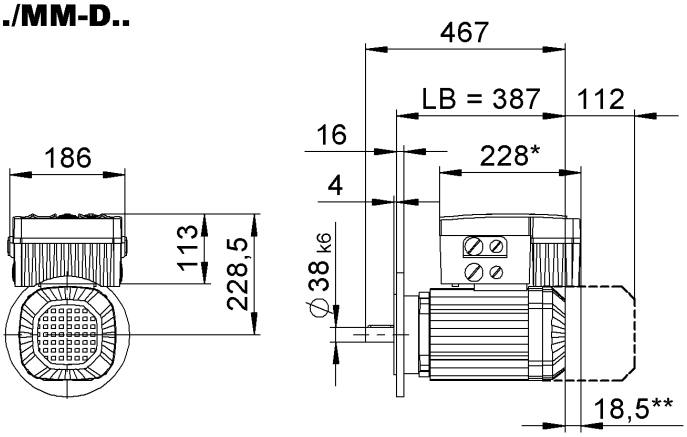

* 254 (MM40)
** 44,5 (MM40)

/C/MM-D..

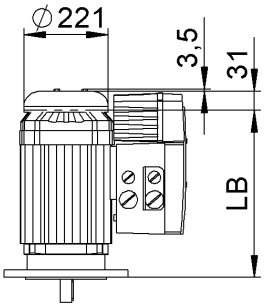

/2W/MM-D..

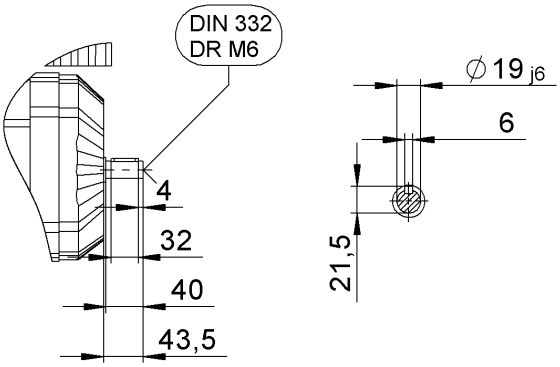

DRS132S/MM-D.. **80 163 00 07**
Bl. 2 (2)

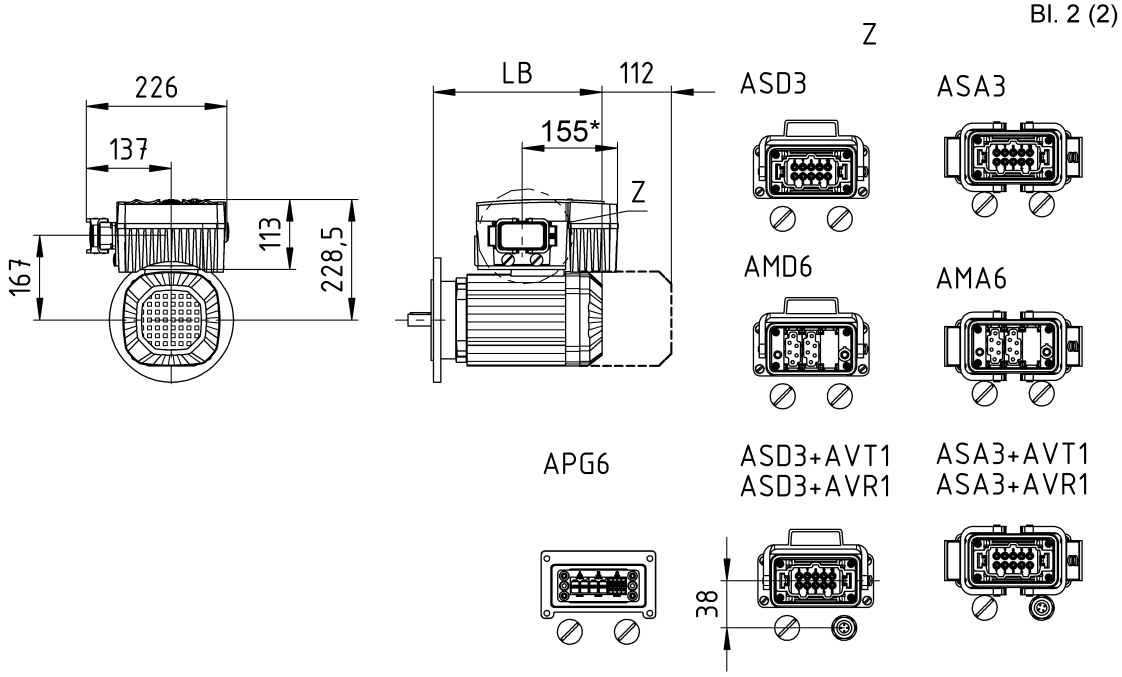

* 181 (MM40)

/EI7./MM-D..

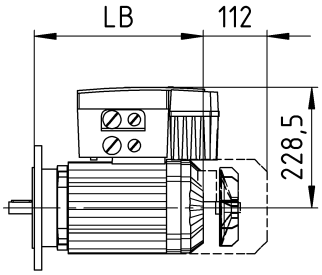

/MM-D../AVT1
/AVR

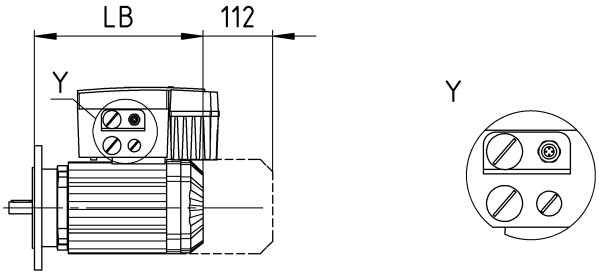

/V/MM-D..

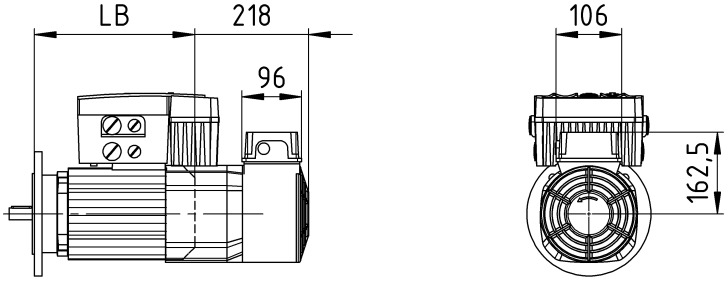

DRS/DRE/DRP132M,MC/FI../MM-D..

80 164 00 07
Bl. 1 (2)

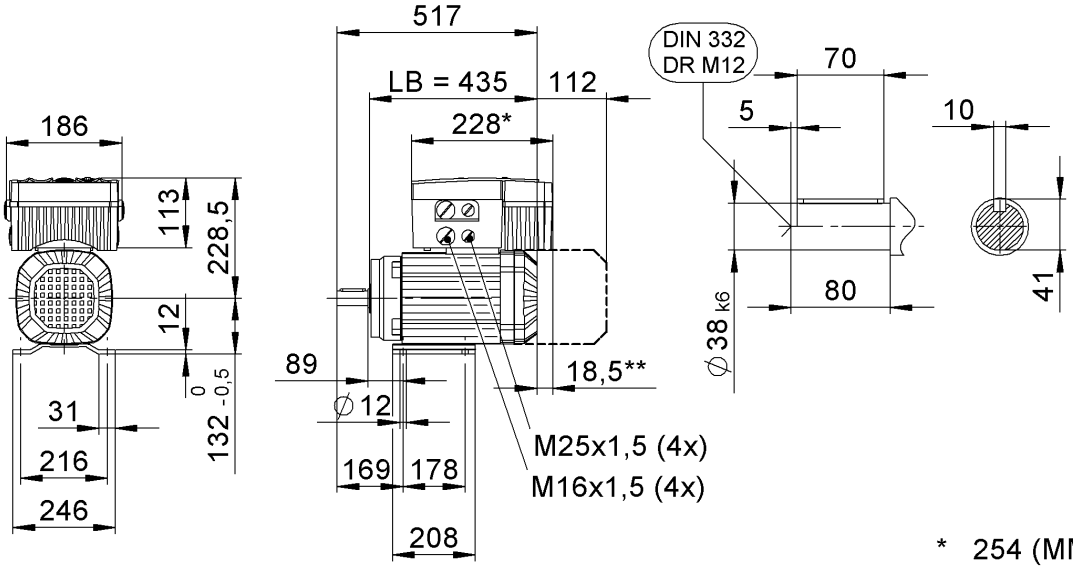

* 254 (MM40)
** 44,5 (MM40)

/FF../MM-D..

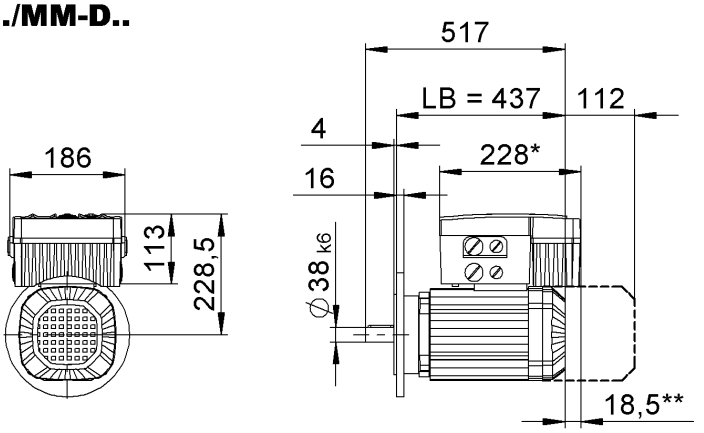

* 254 (MM40)
** 44,5 (MM40)

/C/MM-D..

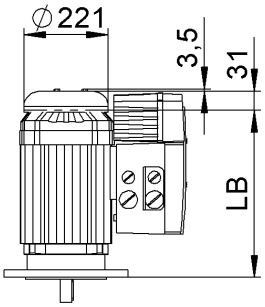

/2W/MM-D..

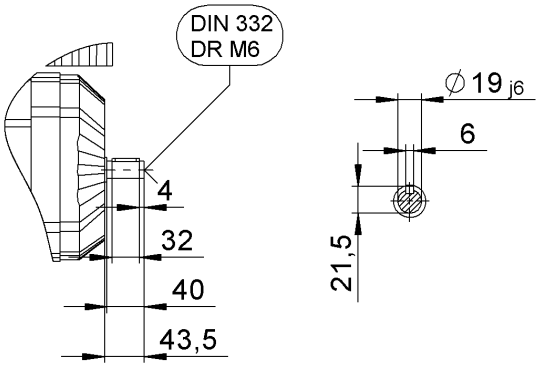

DRS/DRE/DRP132M,MC/MM-D..

80 164 00 07
Bl. 2 (2)

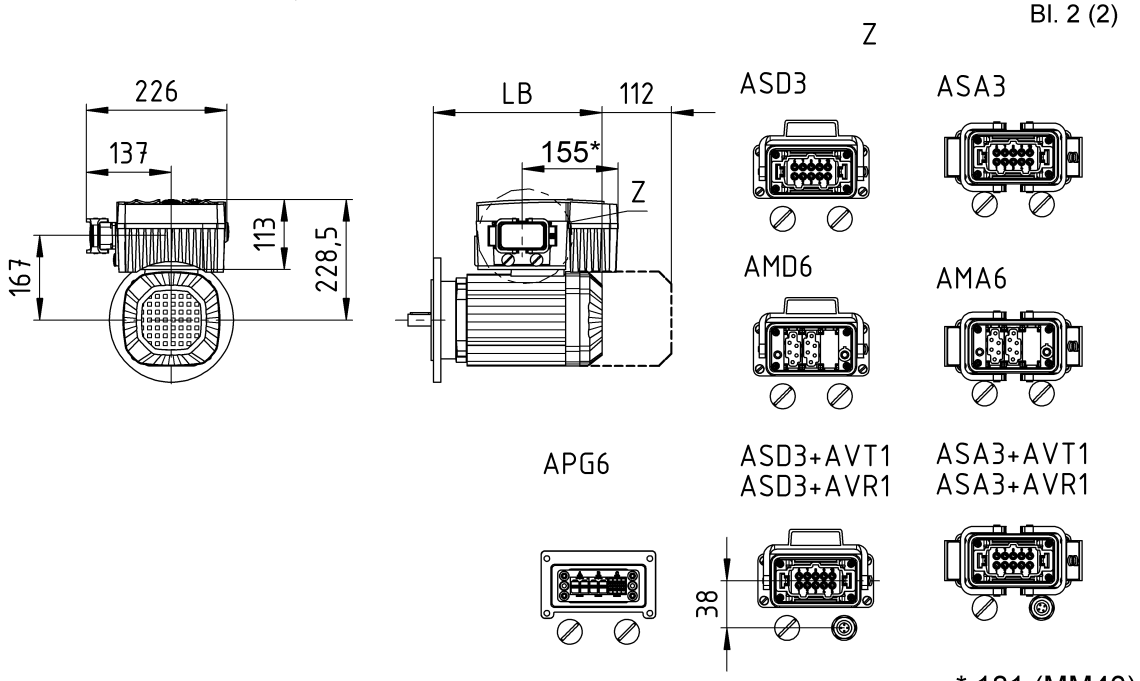

* 181 (MM40)

/EI7./MM-D..

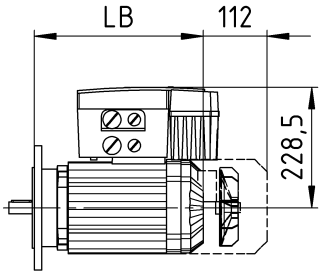

/MM-D../AVT1 /AVR

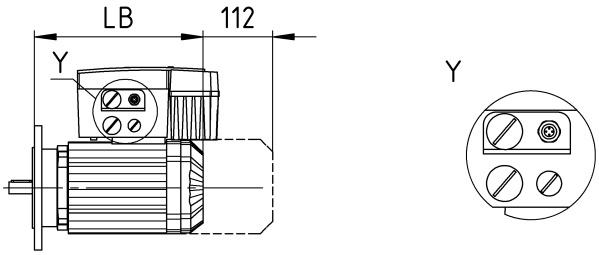

/V/MM-D..

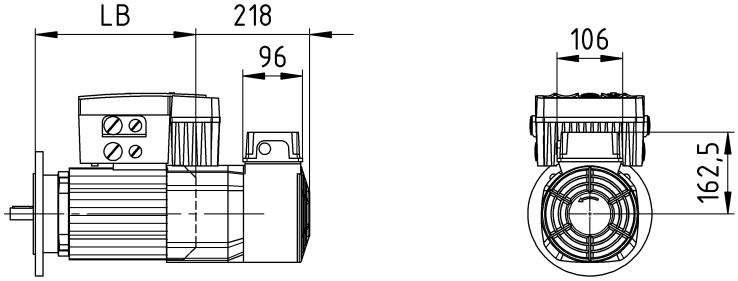

DRE/DRP132S/FI../MM-D..

80 165 00 07
Bl. 1 (2)

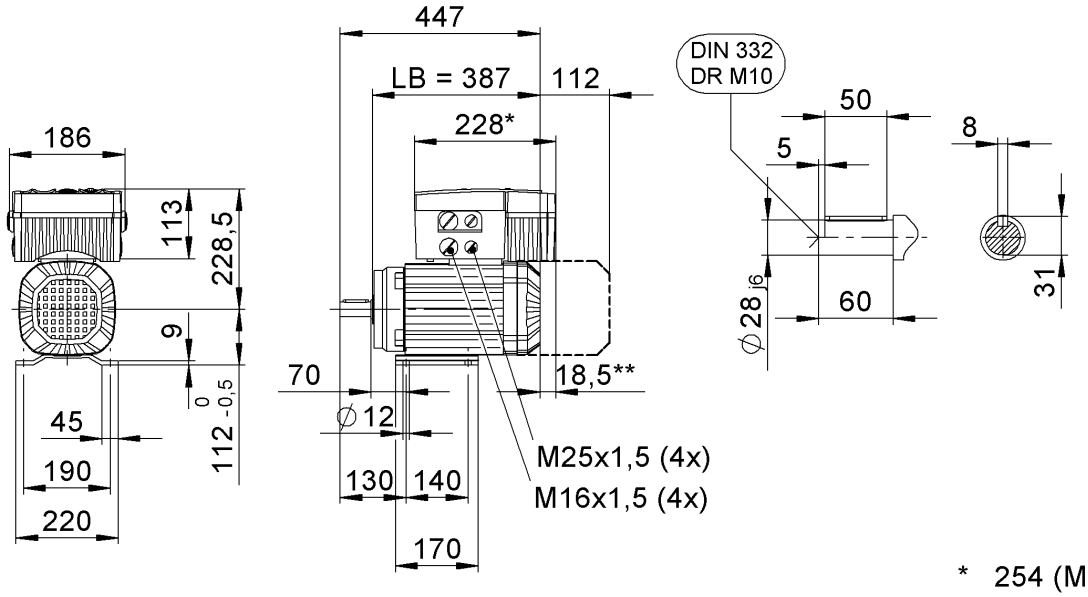

* 254 (MM40)
** 44,5 (MM40)

/FF../MM-D..

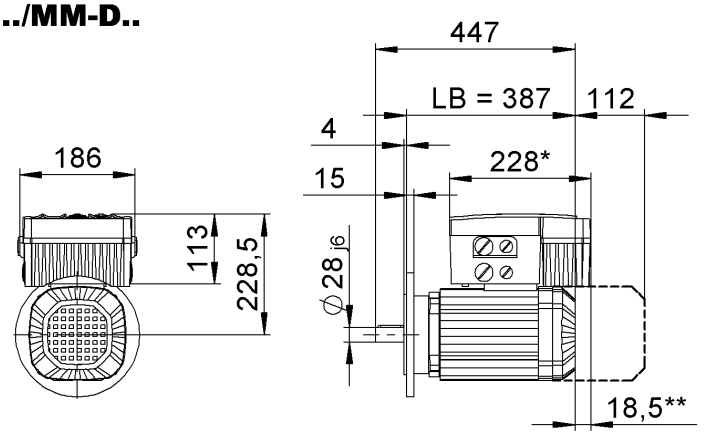

* 254 (MM40)
** 44,5 (MM40)

/C/MM-D..

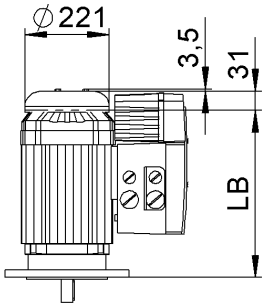

/2W/MM-D..

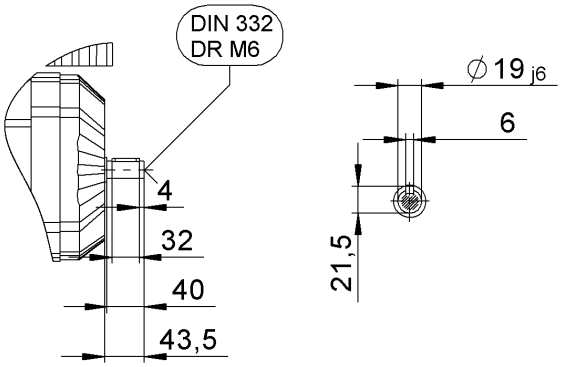

DRE/DRP132S/MM-D.. **80 165 00 07**
Bl. 2 (2)

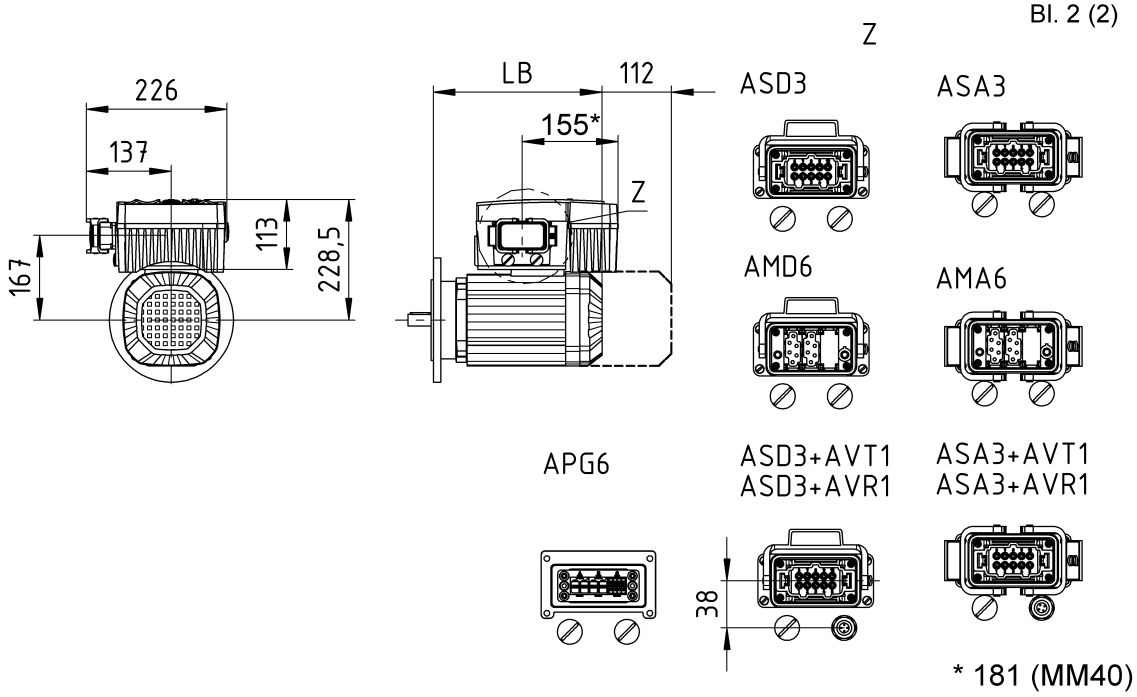

/EI7./MM-D..

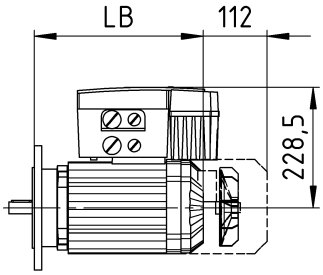

/MM-D../AVT1
/AVR

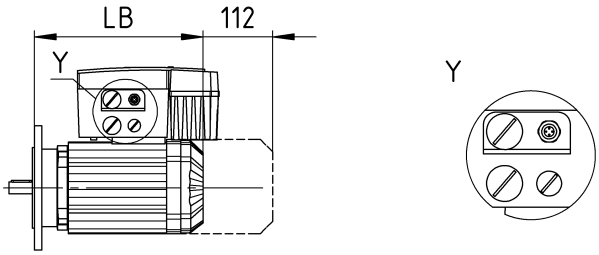

/V/MM-D..

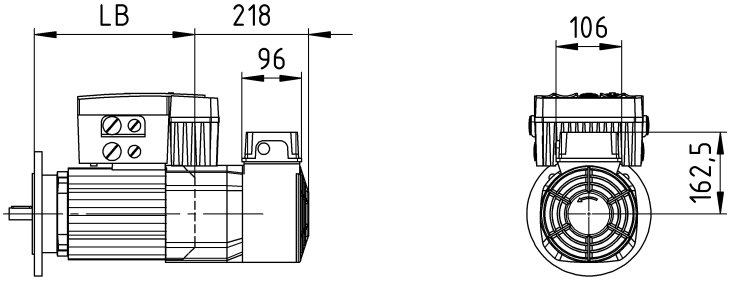

DRE/DRP90M,L/FI../MM-D..(MM22-40)

80 167 00 07
Bl. 1 (2)

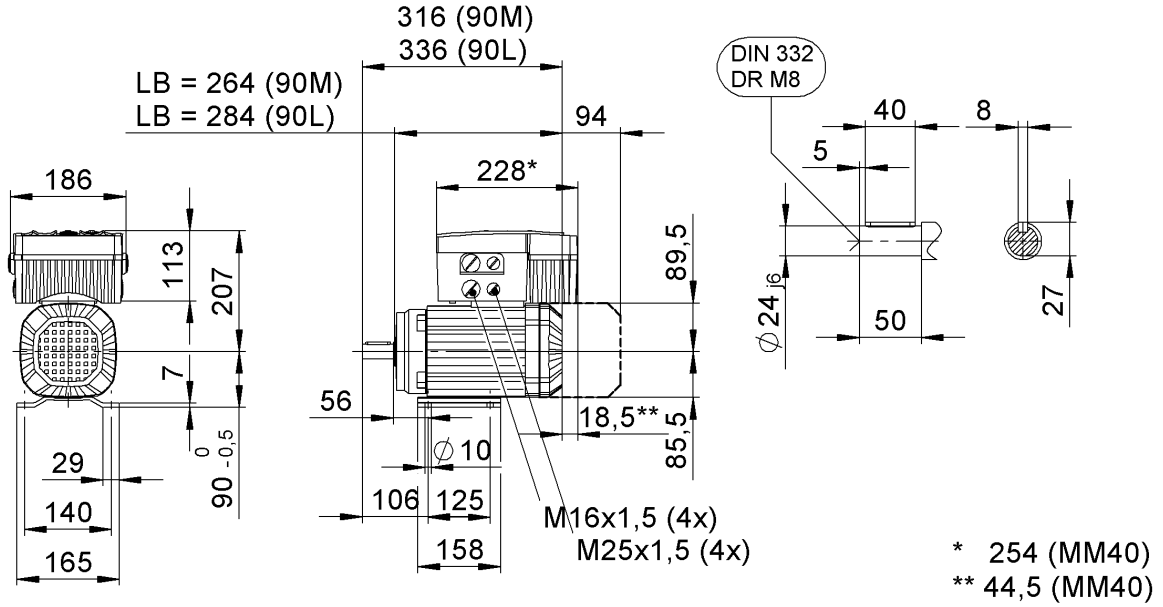

/FF../MM-D..

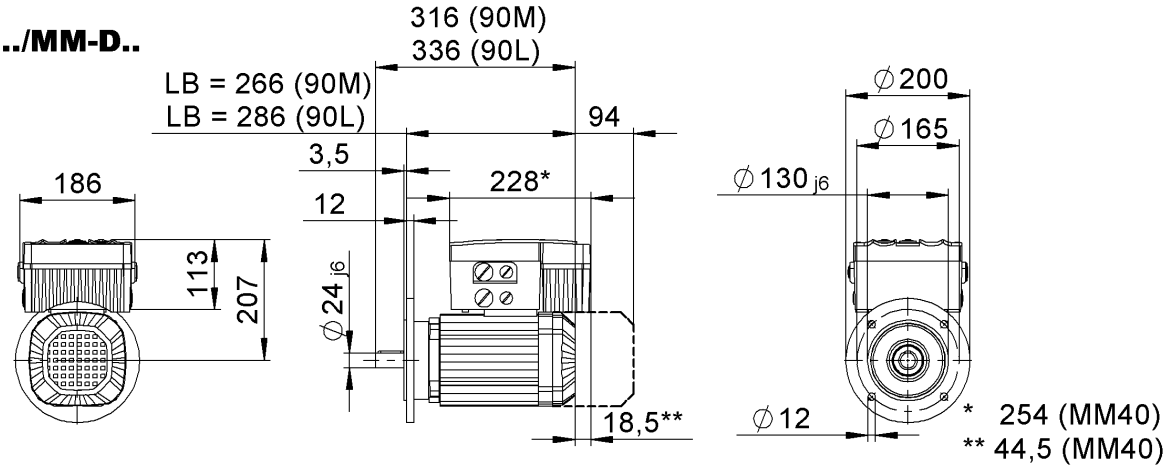

/C/MM-D..

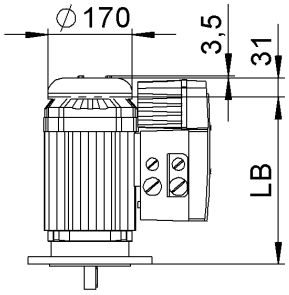

/2W/MM-D..

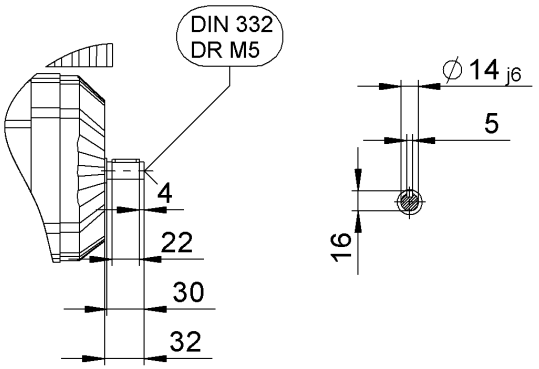

DRE/DRP90M,L/MM-D..(MM22-40)

80 167 00 07
Bl. 2 (2)

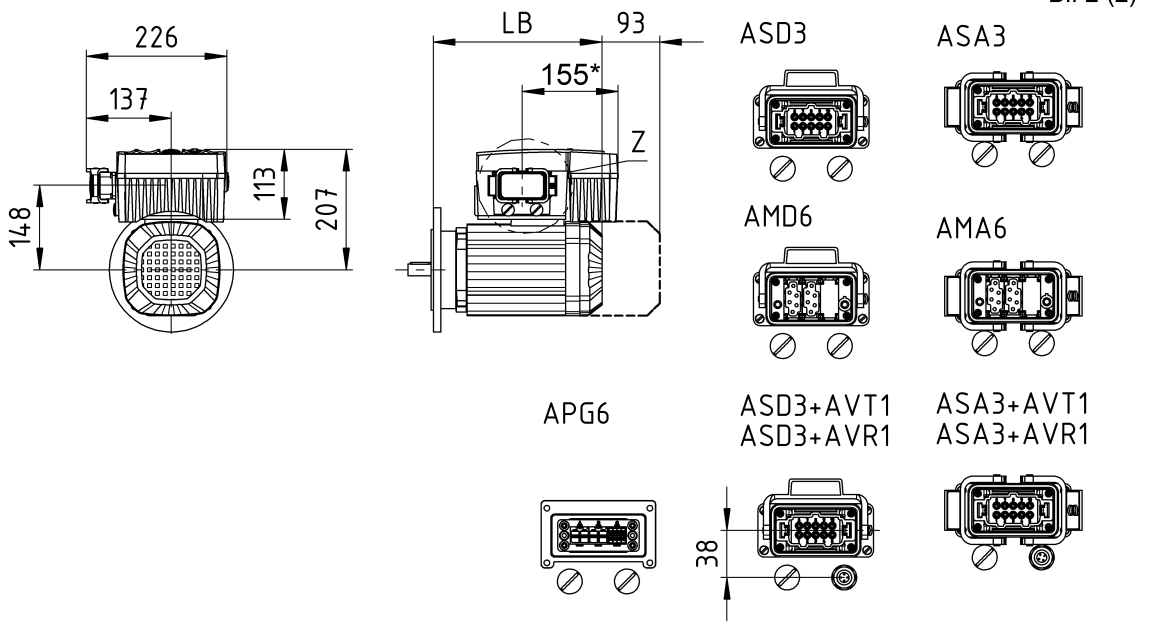

* 181 (MM40)

/EI7./MM-D..

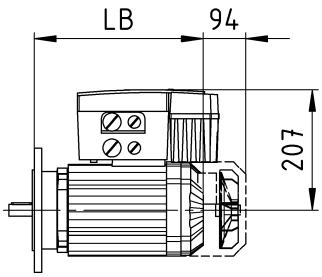

/MM-D../AVT1 /AVR

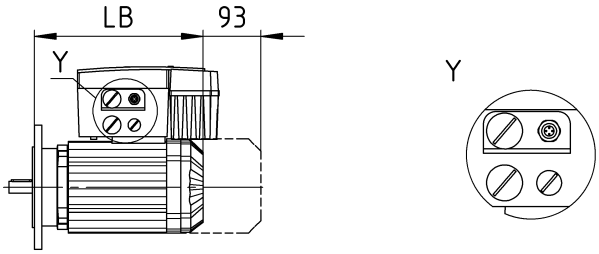

/V/MM-D..

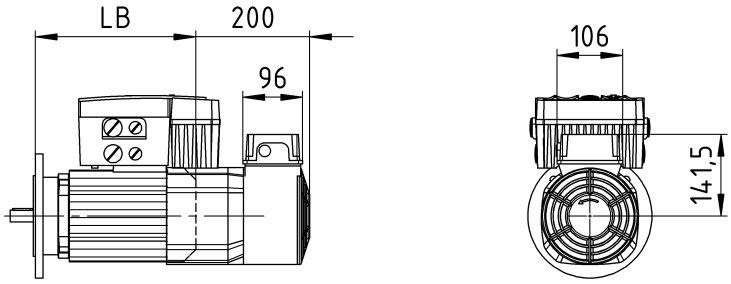

DRS90M/FI../MM-D..(MM22-30)

80 168 00 07
Bl. 1 (2)

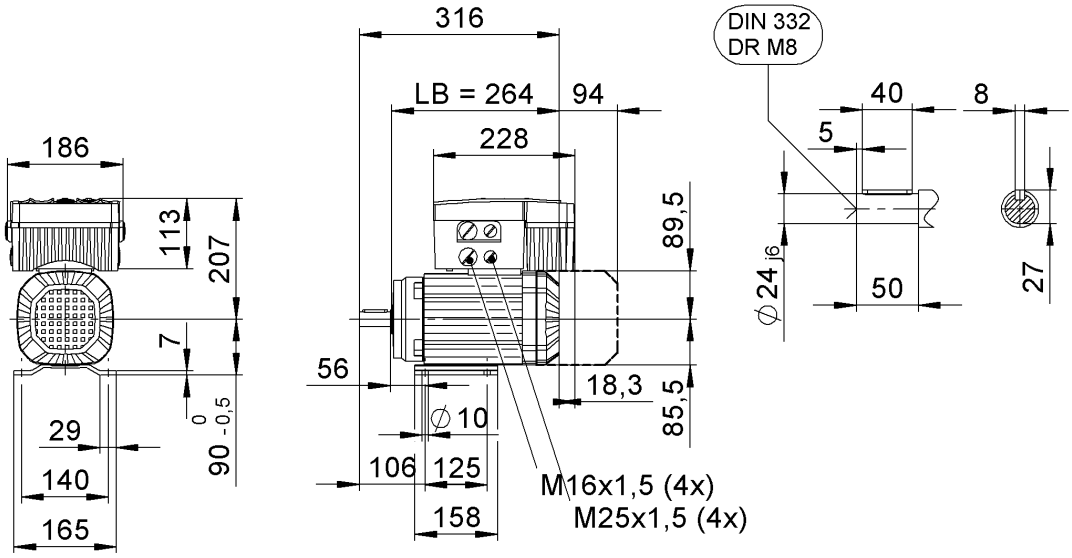

/FF../MM-D..

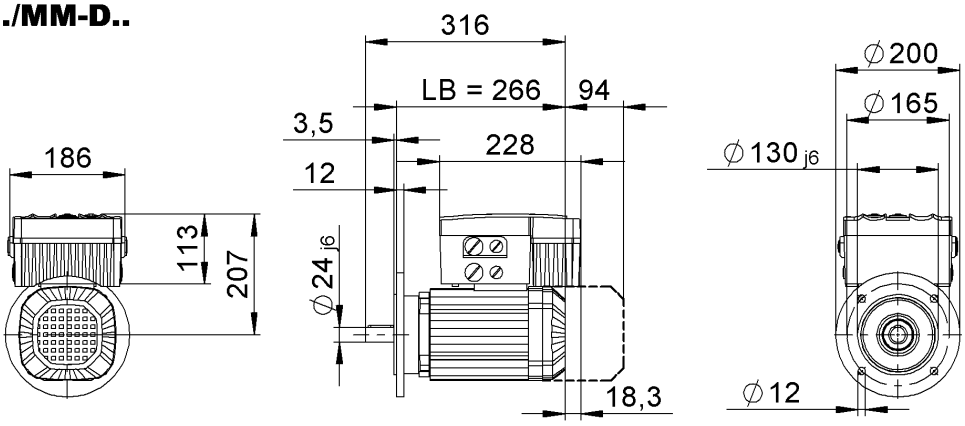

/C/MM-D..

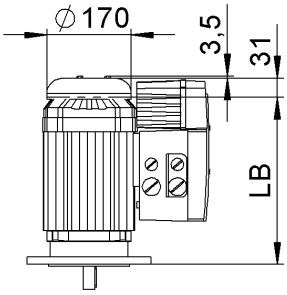

/2W/MM-D..

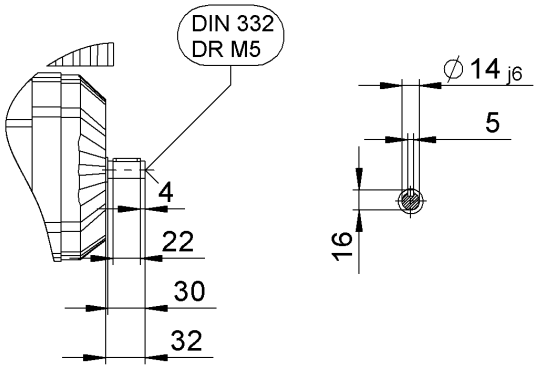

DRS90M/MM-D..(MM22-30)

80 168 00 07
Bl. 2 (2)

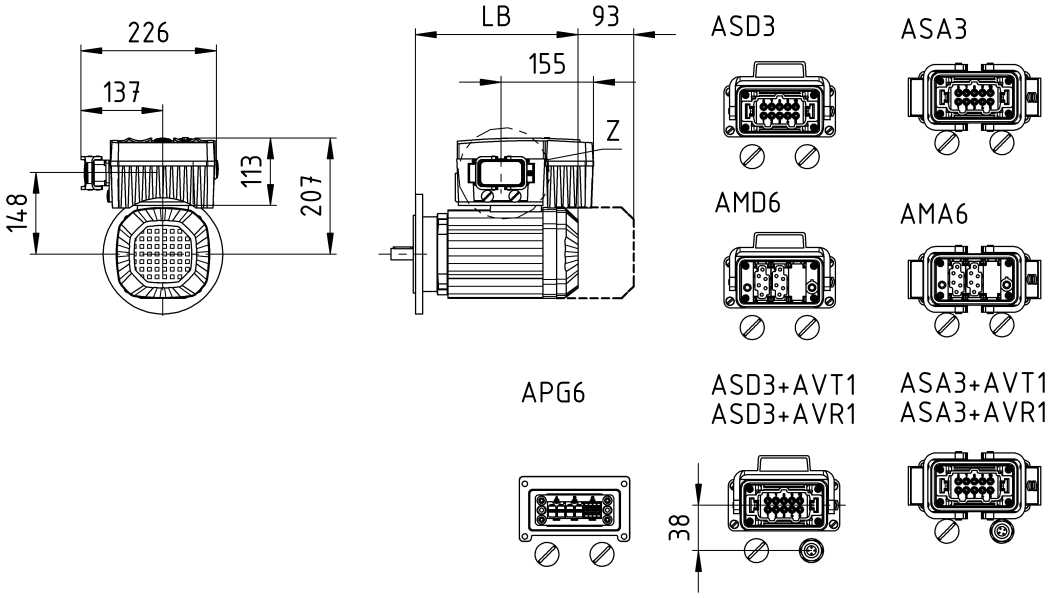

/EI7./MM-D..

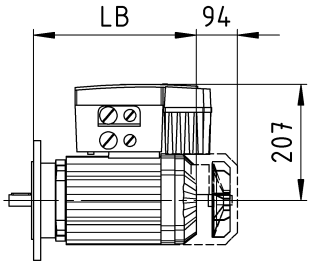

/MM-D../AVT1
/AVR

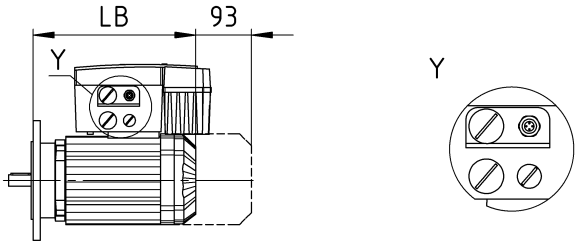

/V/MM-D..

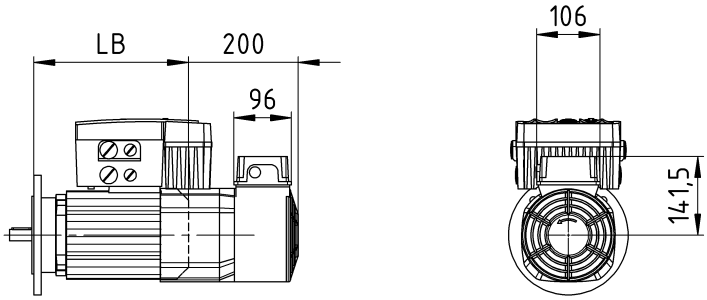

DRS90L/FI../MM-D..(MM22-40)

80 169 00 07
Bl. 1 (2)

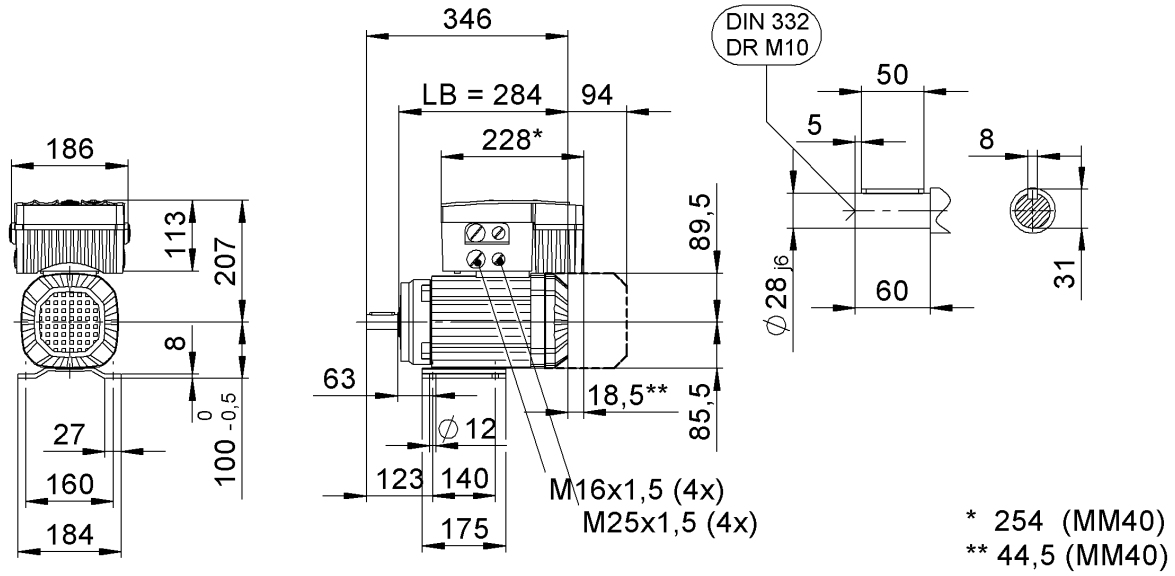

/FF../MM-D..

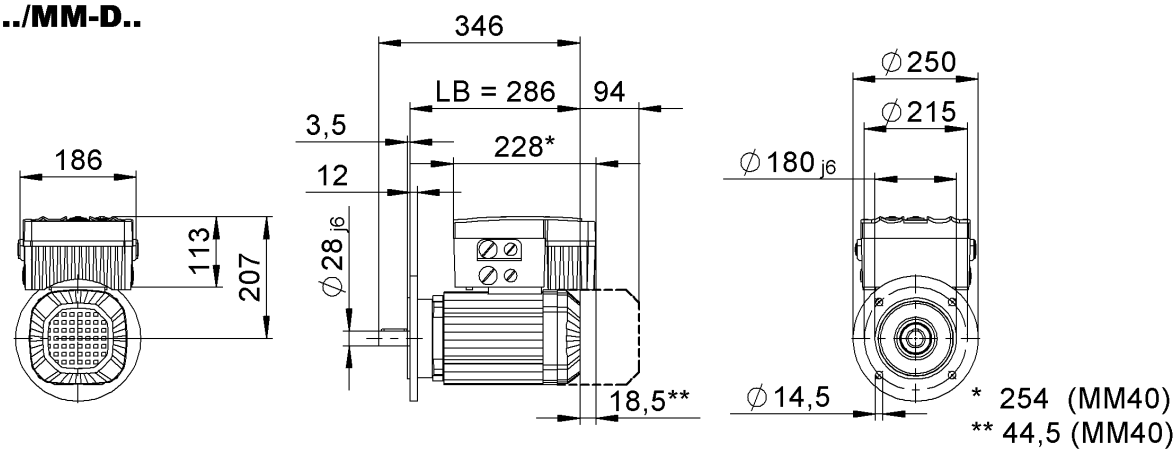

/C/MM-D..

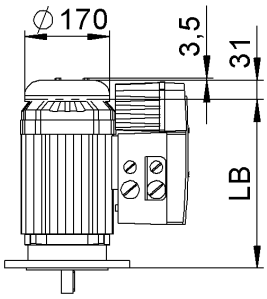

/2W/MM-D..

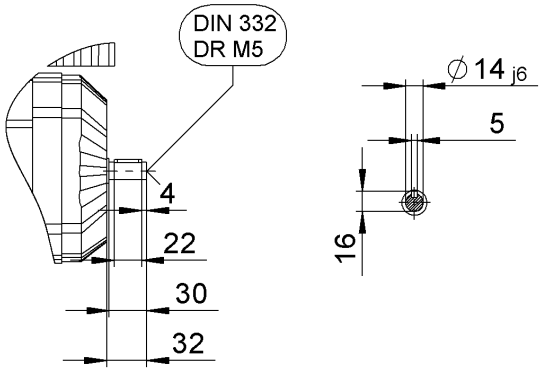

80 169 00 07
Bl. 2 (2)

DRS90L/MM-D..(MM22-40)

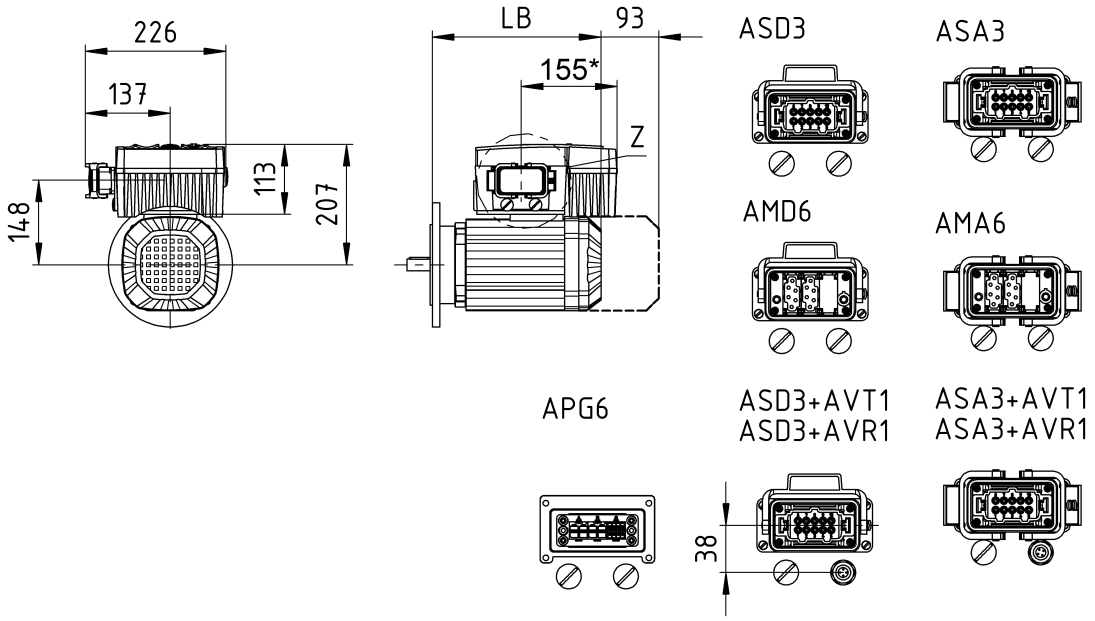

* 181 (MM40)

/EI7./MM-D..

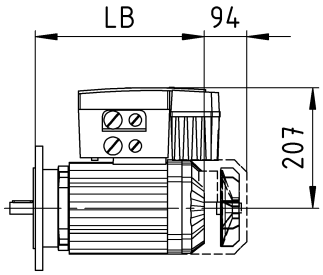

/MM-D../AVT1 /AVR

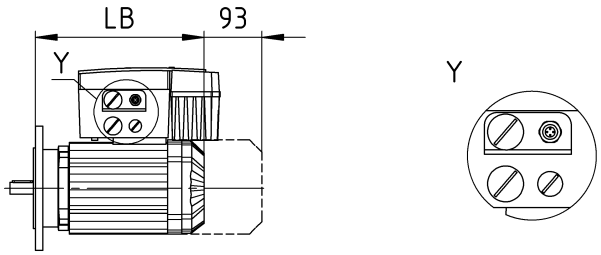

/V/MM-D..

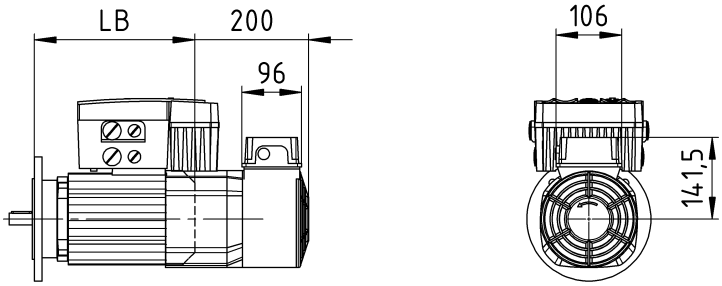

14.7 Fieldbus interfaces

Functional description

Type MF.. fieldbus interfaces allow for connecting MOVIMOT® and MOVI-SWITCH® drives to a standardized fieldbus system. These fieldbus interfaces not only allow for controlling MOVIMOT® and MOVI-SWITCH® drives but also for reading sensor signals as well as controlling actuators via the digital input and output terminals. All fieldbus interfaces and field distributors are supplied in protection class IP65 as standard.

Type MQ.. fieldbus interfaces are based on the same housing and fieldbus technology as type MF.. fieldbus interfaces but are additionally equipped with an integrated control featuring the following functions:

- Programmable using IPOS$^{plus®}$
- Simple positioning with built-in encoder EI7C
- Integrated I/O preprocessing and timing elements
- Protocol modification

Installation options:

The following illustration shows the different installation options of the fieldbus interfaces MF.. / MQ..:

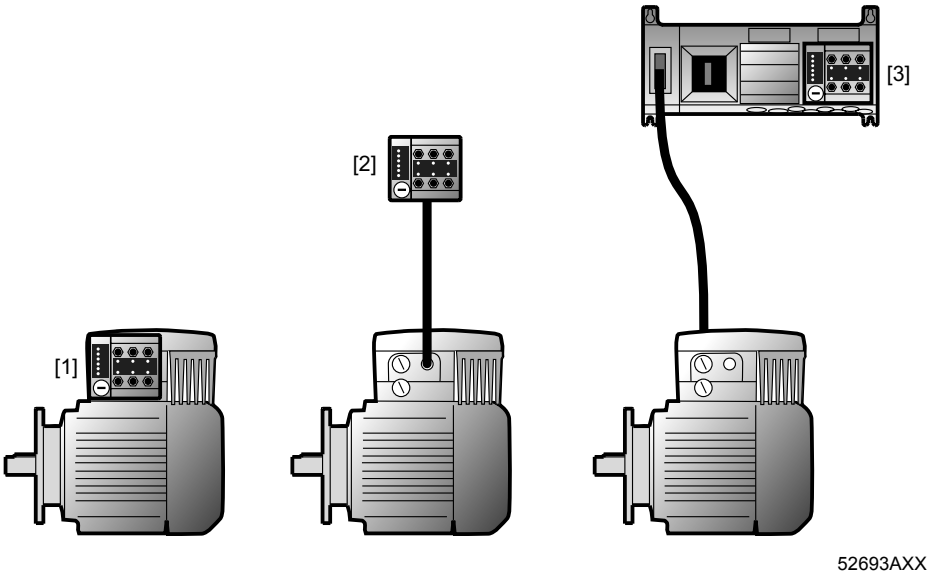

[1] Mounting on the drive
[2] Installation in the field
[3] Installation in the field distributor (for detailed information on field distributors, refer to the "Drive System for Decentralized Installation" catalog)

MF../Z.1 fieldbus interfaces

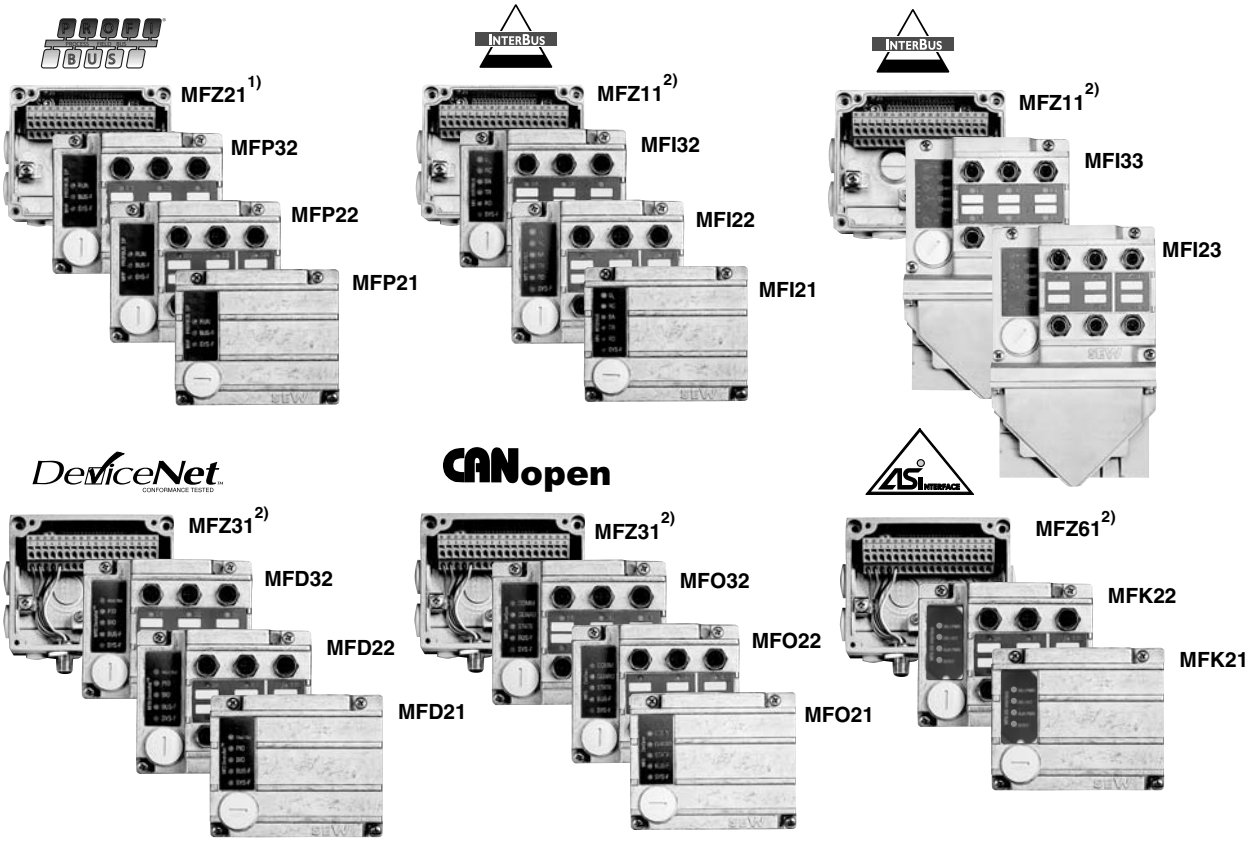

52512AXX

Figure 21: MF../Z.1 fieldbus interfaces

1 Red terminal imprint
2 Black terminal imprint

Variants

Module type Part number	MFP21D 823 624 0	MFP22D 823 625 9	MFP32D 823 626 7
Connection technology **Sensors / actuators**	Terminals	M12 and terminals	M12 and terminals
Digital inputs	4	4	6
Digital outputs	2	2	0
Associated module terminal box Part number Fieldbus connection technology	MFZ21D 823 627 5 Terminals		MFZ21D/AVT2/AWT2 824 299 2 M12 plug connector
Module + module carrier	**MFP21D/Z21D..**	**MFP22D/Z21D..**	**MFP32D/Z21D..**

Variants

Module type Part number	MFI21A 823 526 0	MFI22A 823 527 9	MFI32A 823 528 7
Connection technology **Sensors / actuators**	Terminals	M12 and terminals	M12 and terminals
Digital inputs	4	4	6
Digital outputs	2	2	0
Associated module terminal box Part number Fieldbus connection technology	MFZ11A 823 514 7 Terminals		
Module + module carrier	**MFI21A/Z11A**	**MFI22A/Z11A**	**MFI32A/Z11A**

Variants with fiber

optic cable and Rugged Line connector (Phoenix Contact)

Module type **Part number**	**MFI23F** **824 335 2**	**MFI33F** **824 336 0**
Connection technology Fieldbus Sensors / actuators	FO (via Rugged Line connector) M12 and terminals	
Digital inputs	4	6
Digital outputs	2	0
Associated module terminal box Part number	MFZ11A 823 514 7	
Module + module carrier	**MFI23F/Z11A**	**MFI33F/Z11A**

Variants

Module type **Part number**	**MFD21A** **823 551 1**	**MFD22A** **823,552 X**	**MFD32A** **823 553 8**
Connection technology **Sensors / actuators**	Terminals	M12 and terminals	M12 and terminals
Digital inputs	4	4	6
Digital outputs	2	2	0
Associated module terminal box Part number Fieldbus connection technology	MFZ31A 823 548 1 Micro-style connector		
Module + module carrier	**MFD21A/Z31A**	**MFD22A/Z31A**	**MFD32A/Z31A**

Variants

Module type **Part number**	**MFO21A** **823 957 6**	**MFO22A** **823 958 4**	**MFO32A** **823 959 2**
Connection technology **Sensors / actuators**	Terminals	M12 and terminals	M12 and terminals
Digital inputs	4	4	6
Digital outputs	2	2	0
Associated module terminal box Part number Fieldbus connection technology	MFZ31A 823 548 1 M12 plug connector		
Module + module carrier	**MFO21A/Z31A**	**MFO22A/Z31A**	**MFO32A/Z31A**

Variants

Module type **Part number**	**MFK21A** **824 537 1**	**MFK22A** **824 539 8**
Connection technology **Sensors / actuators**	Terminals	M12 and terminals
Digital inputs	4	4
Digital outputs	2	2
Associated module terminal box Part number Conection technology AS-interface	MFZ61A 824 574 6 M12 plug connector	
Module + module carrier	**MFK21A/Z61A**	**MFK22A/Z61A**

MQ../Z.1 fieldbus interfaces

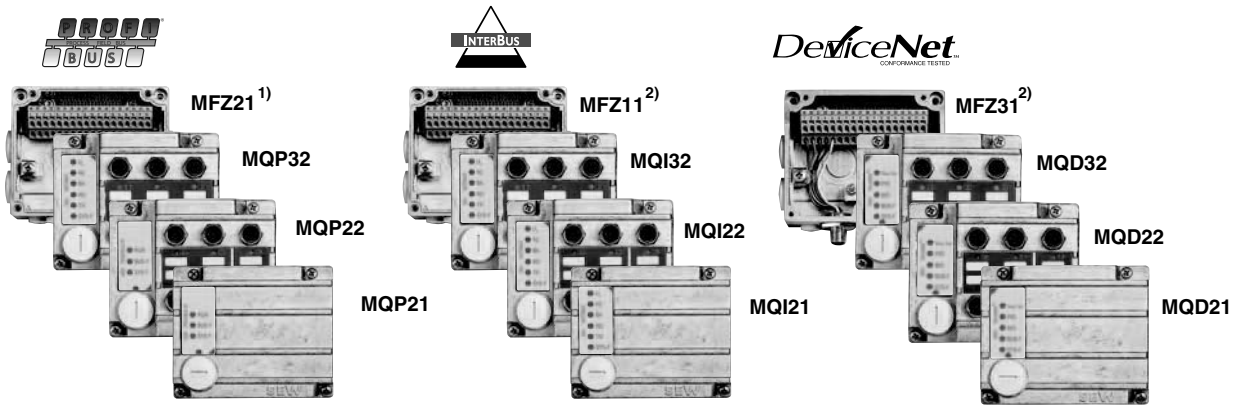

52539AXX

Figure 22: MQ../Z.1 fieldbus interfaces

1) Red terminal imprint
2) Black terminal imprint

Variants

Module type **Part number**	**MQP21D** **824 190 2**	**MQP22D** **824 191 0**	**MQP32D** **824 192 9**
Connection technology **Sensors / actuators**	Terminals	M12 and terminals	M12 and terminals
Digital inputs	4	4	6
Digital outputs	2	2	0
Associated module terminal box Part number Fieldbus connection technology	MFZ21D 823 627 5 Terminals		MFZ21D/AVT2/AWT2 824 299 2 M12 plug connector
Module + module carrier	**MQP21D/Z21D..**	**MQP22D/Z21D..**	**MQP32D/Z21D..**

Variants

Module type **Part number**	**MQI21A** **824 203 8**	**MQI22A** **824 204 6**	**MQI32A** **824 205 4**
Connection technology **Sensors / actuators**	Terminals	M12 and terminals	M12 and terminals
Digital inputs	4	4	6
Digital outputs	2	2	0
Associated module terminal box Part number Fieldbus connection technology	MFZ11A 823 514 7 Terminals		
Module + module carrier	**MQI21A/Z11A**	**MQI22A/Z11A**	**MQI32A/Z11A**

Variants

Module type **Part number**	**MQD21A** **824 200 3**	**MQD22A** **824 201 1**	**MQD32A** **824,202 X**
Connection technology **Sensors / actuators**	Terminals	M12 and terminals	M12 and terminals
Digital inputs	4	4	6
Digital outputs	2	2	0
Associated module terminal box Part number Fieldbus connection technology	MFZ31A 823 548 1 Micro-style connector		
Module + module carrier	**MQD21A/Z31A**	**MQD22A/Z31A**	**MQD32A/Z31A**

Dimension drawing MF../Z.1, MQ../Z.1 fieldbus interfaces

Dimension drawing MF.. / MQ.. fieldbus interface

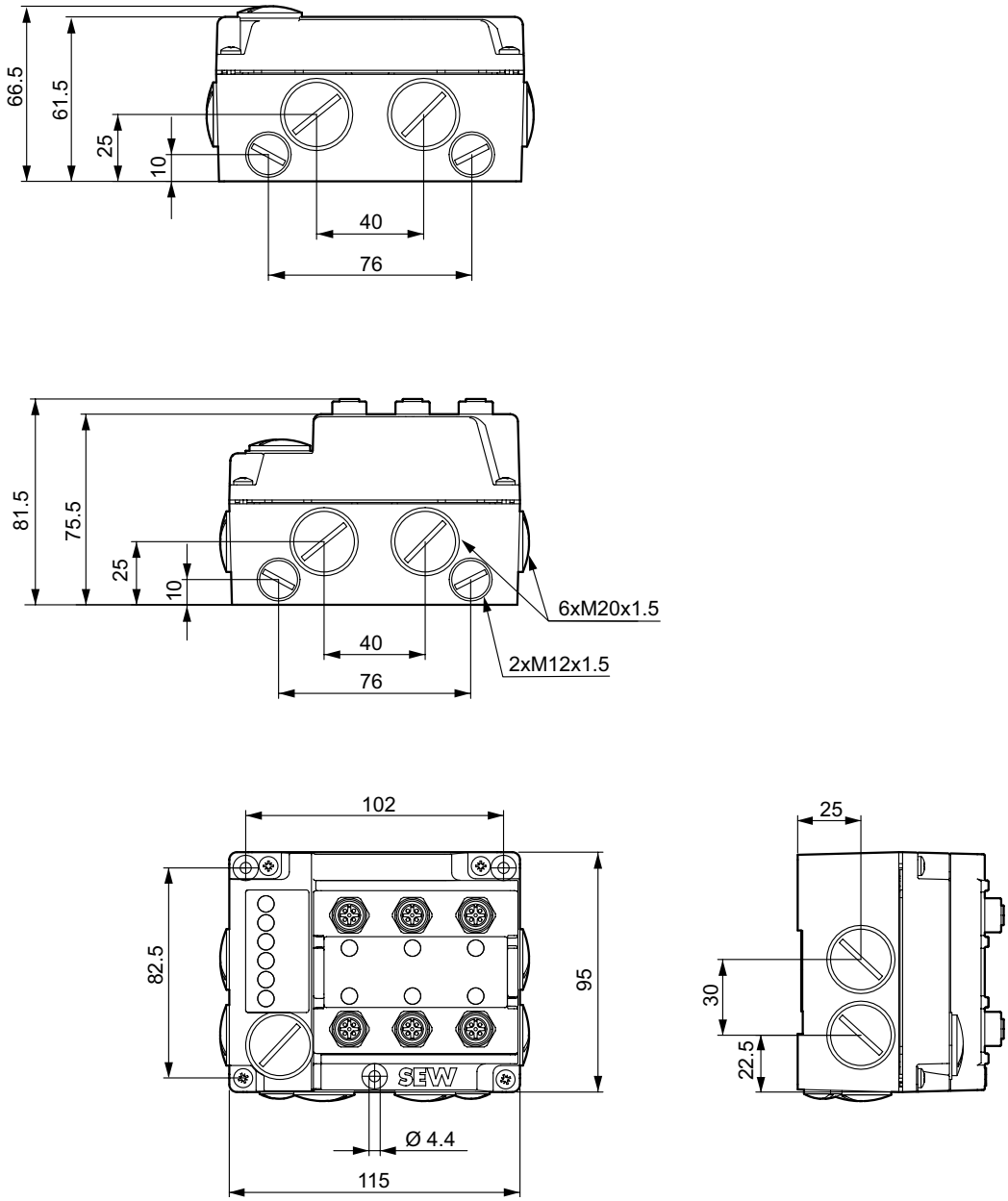

Figure 23: Dimension sheet fieldbus interfaces MF.. / MQ..

Dimension drawing MFI23 / MFI33 fieldbus interface with Rugged-Line connection

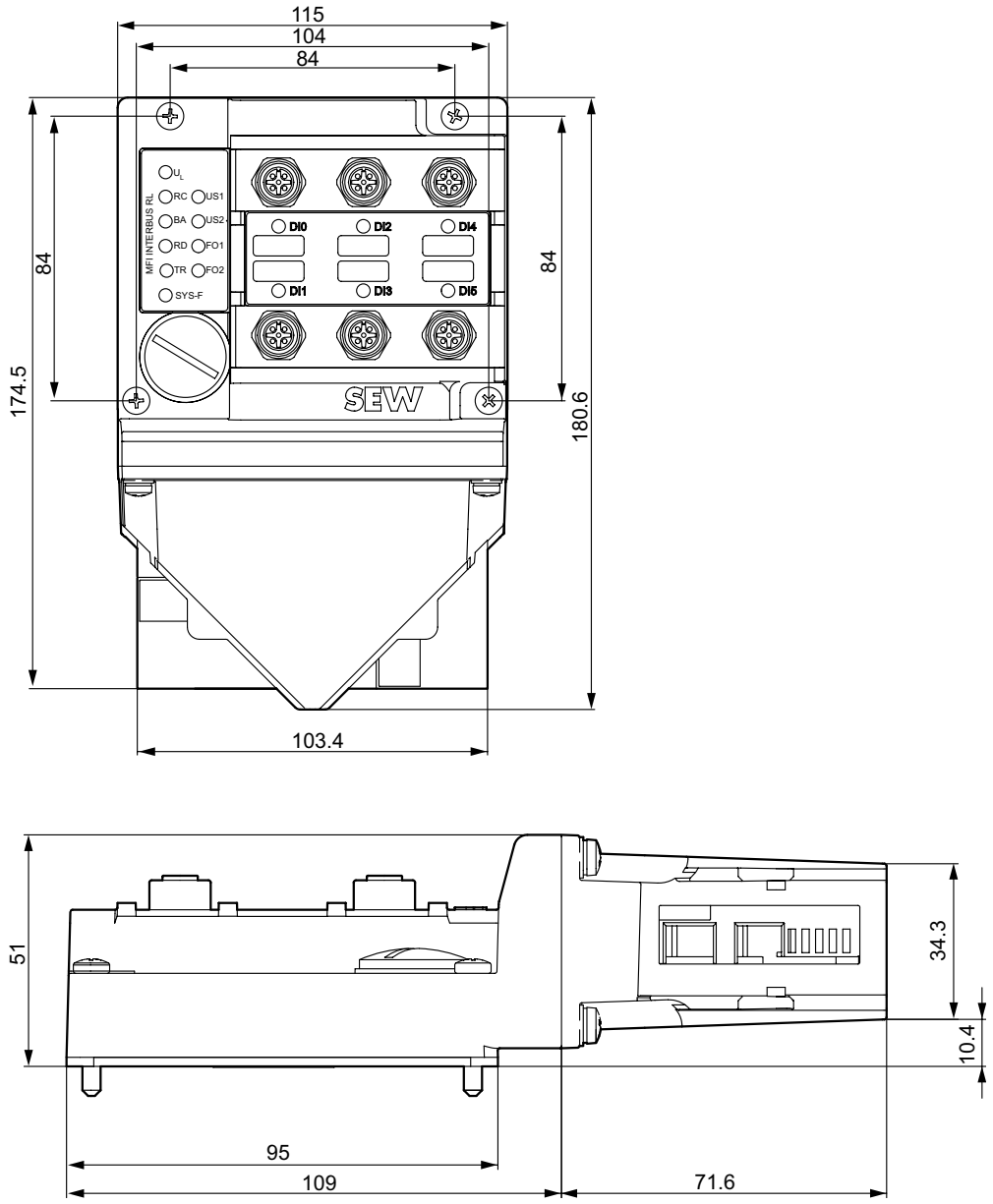

Figure 24: Dimension drawing MFI23 / MFI33 fieldbus interface with Rugged-Line connection

Fieldbus interface options

MFG11A Keypad

The MFG11A keypad is plugged onto a MFZ.. connection module (not included in the scope of delivery) instead of a fieldbus interface for manual control of a MOVIMOT® drive.

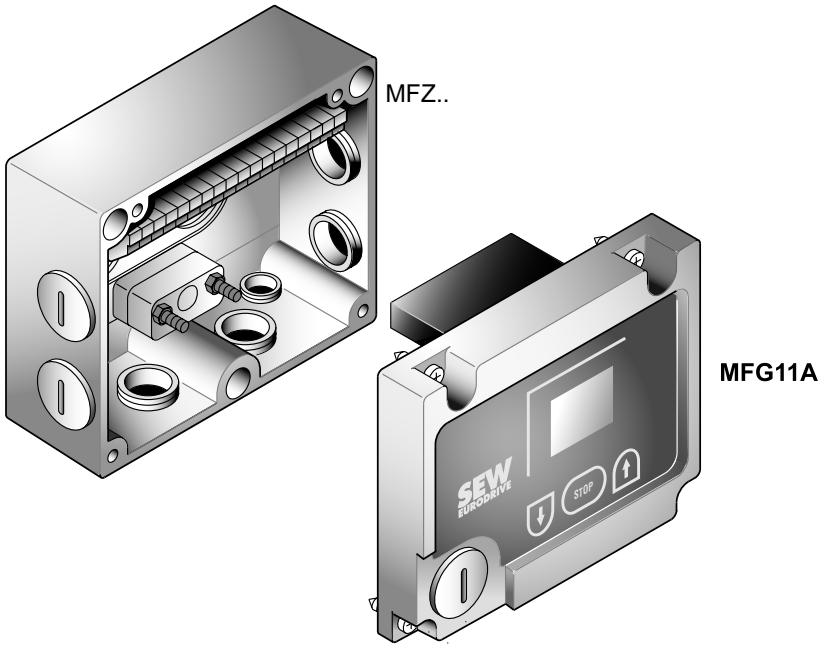

50030BXX

Figure 25: MFG11A keypad

Technical data:

Option MFG11A	
Part number	823 559 7
Input voltage	DC 24 V ± 25 %
Current consumption	approx. 70 mA
Setpoint resolution	1 %
Serial interface	RS-485 for connecting max. 31 MOVIMOT® inverters (max. 200 m, 9600 baud)
Degree of protection	IP65 (MFG11A installed on MFZ.. connection module)
Ambient temperature	-15...60° C

Bus diagnostics options

Functional description:

MF../MQ.. fieldbus modules are equipped with a diagnostics interface for startup and service. This interface allows for bus diagnostics with the SEW software MOVITOOLS® MotionStudio.

Interface adapter

The diagnostic interface can be connected to a PC using one of the following options:

- USB11A with USB interface, part number 0 824 831 1
- UWS21B with serial interface RS-232, part number 1 820 456 2

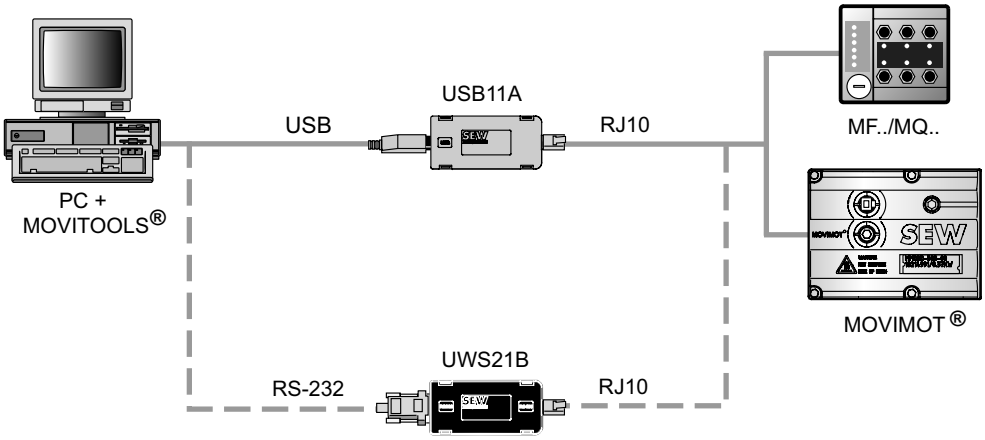

63371axx

Scope of delivery:

- Interface adapter
- Cable with RJ10 plug connector
- Interface cable USB (USB11A) or RS-232 (UWS21B)

15 Abbreviation Key and Index

15.1 Abbreviation key

a, b, f	Constants for converting overhung loads	[mm]
c	Constant for converting overhung load	[Nmm]
cos φ	Power factor of the motor	
F_A	Axial force acting on the output shaft	[N]
f_B	Service factor	
f_{supply}	Mains frequency	[Hz]
F_R	Overhung load on the output shaft	[N]
f_T, f_H	Power reduction factors of the motor	
f_Z	Transmission element factor for calculating the overhung load	
H	Installation altitude	[m ü. NN]
η	Forward efficiency	
η'	Back-driving efficiency	
$\eta_{75\%}/\eta_{100\%}$	Motor efficiency at 75%/100% rated load	
I_A/I_N	Ratio of starting current/rated motor current	
I_N	Rated current	[A]
IP..	Degree of protection	
i_{tot}	Gear ratios in total	
i_{sch}	Gear ratio of the worm gear stage	
ϑ_{amb}	Ambient temperature	[°C]
J_{Last}	Mass moment of inertia to be driven	[10^{-4} kgm^2]
J_{Mot}	Mass moment of inertia of the motor	[10^{-4} kgm^2]
J_X	Mass moment of inertia reduced to the motor shaft	[10^{-4} kgm^2]
J_Z	Mass moment of inertia of the heavy fan	[10^{-4} kgm^2]
M_a	Output torque	[Nm]
M_B	Braking torque	[Nm]
M_H/M_N	Ratio acceleration torque/rated motor torque	
M_A/M_N	Ratio starting torque/rated motor torque	
n_a	Output speed	[rpm]
n_e	Input speed	[rpm]
n_M	Motor speed	[rpm]
n_N	Rated speed	[rpm]
P_a	Output power	[kW]
P_e	Mathematical input power of the gear unit	[kW]
P_N	Rated power	[kW]
S.., %ED	Duty cycle and cyclic duration factor cdf	
T	Cycle duration	[min]
t1	Response time of the motor brake	[10^{-3} s]
t2	Motor brake application time	[10^{-3} s]
U_{Bremse}	Operating voltage of the brake	[V]
U_{Mot}	Operating voltage of the motor	[V]
Z	Starting frequency	[1/h], [c/h]
Z_0	No-load starting frequency	[1/h], [c/h]

A

AC motors
Mounting position designations 79
Additional documentation 33
Anti-friction bearing greases 80
Assemblying gear units
using SEW installation/removal kit 89
Assemblying the gear unit
Supplied fastening parts 87
Available MOVIMOT® motor combinations 383
Axial forces 42

B

BEM 394
BES 395
Brake rectifier 394, 395
Brakemotors 13
Bus diagnostics 449

C

Churning losses 37, 55
Condition monitoring
Product Description 16
Project planning 49
Technical data 108
Connection options 21
Connection technology
MOVIMOT® standard design 389
Corrosion protection 14
Covers, fixed 106

D

Designs, possible
Brakemotors 13
for international markets 13
reduced backlash 12
RM gearmotors 12
Spiroplan® gearmotors 12
Diagnostic unit
DUV10A Vibration Sensor 16, 49, 110
Oil aging sensor DUO10A 16, 49, 108
Didmension sheets
Helical-bevel gearmotors 275
Dimension sheets
Fieldbus interfaces 446
Helical gearmotors 145
Helical-worm gearmotors 333
MOVIMOT® AC motors 407
Parallel shaft helical gearmotors 212
Spiroplan® gearmotors 372
Documentation, additional 9
Drive selection
Required data 34

E

Efficiency of SEW gear units 36
Encoder 21
Extended storage, gear unit 15
External braking resistors 395, 402

F

Fastening, gear units 102
Fieldbus interfaces 442
Dimension sheets 446
Functional description 442
MF../Z.1 fieldbus interfaces 443
MQ../Z.1 fieldbus interfaces 445
Options 448
Flange contours FAF.., KAF.., SAF..
and WAF.. 105
Flange contours FF.., KF.., SF.. and WF.. 104
Flange contours RF.. and R..F 103

G

Gear unit
Extended storage 15
Project planning 36
Unit designation 17
Gear unit mounting 102
Gearmotor dimension sheets
Notes 113
General information 11

H

Helical gear units Unit designation 17
Helical gearmotors
Dimension sheets 145
Selection tables 118
Structure of the selection tables 112
Versions 24
Helical-bevel gear units
Unit designation 18
Helical-bevel gearmotors
Dimension sheets 275
Mounting positions 64
Selection tables 259
Structure of the selection tables 112
Versions 27
Helical-worm gear units Unit designation 18
Helical-worm gearmotors
Dimension sheets 333
Mounting positions 67
Selection tables 317
Structure of the selection tables 112
Versions 29
Hollow shaft mounting system, TorqLOC® 93
Hollow shaft, shouldered with shrink disc 95

I

International markets 13

L

Lubricants
Anti-friction bearing greases 80
General information 80
Lubricant fill quantities 82

Lubricant table 81

M

MFG11A 448
MLU13A 396
MNF11A 396
Mounting position designation
6 mounting positions M1-M6 50
Mounting positions 50
AC motors 79
Churning losses 37, 55
Helical gearmotors 56
Helical-bevel gearmotors 64
Helical-worm gearmotors 67
Key to the mounting position sheets 55
Parallel shaft helical gearmotors 61
Spiroplan® gearmotors 73
MOVIMOT® AC motors
Available combinations 383
Connection technology standard design 389
Dimension sheets 407
Motor data 383
Options 394
Order example 393
Retrofit kits 404
MOVIMOT® retrofit kits 404
MWS21A 449

O

Oil aging sensor
Technical data and part numbers 108
Oil expansion tank 38
Options
External braking resistors 402
Factory installed 403
Internal braking resistors 402
Keypad DBG 401
MWA21A setpoint converter 400
Setpoint potentiometer MBG11A 399
Speed control module MLG.1A 398
Unit designation 19
Voltage supply MLU.1A 397
Options, integrated 394
Brake control BEM 394
Brake control BES 395
internal voltage relay MLU13A 396
Line filter MNF11A 396
Voltage relay URM 395
Order example 393
Order information
Examples 54
Output direction of rotation with backstop 51
Position motor terminal box and cable entry 53
Position of output end in right-angle gear units 52
Position of the output shaft and output flange 51

Overhung loads 42

P

Parallel shaft helical gear units
Unit designation 17
Parallel shaft helical gearmotors
Dimension sheets 212
Mounting positions 61
Selection tables 191
Structure of the selection tables 112
Versions 25
Product description, general information 11
Product groups 7
PROFIBUS 443, 445
Project planning for drives
Additional documentation 33
Data for drive selection 34
Procedure 35
Project planning for gear units
Churning losses 37
Efficiency of SEW gear units 36
Force application, definition 43
Oil expansion tank 38
Overhung and axial loads 42
Overhung load conversion 44
Overhung load conversion, gear unit constants 45
Permitted axial force 43
Permitted overhung load 42
RM gear units 46
Self-locking 36
Service factor 39
Project planning for RM gear units 46
Project planning procedure 35

R

Reduced backlash gear units 12
Removing gear units
using SEW installation/removal kit 91
Retrofit sets 404
RM gearmotors 12

S

Selection tables
Helical gearmotors 118
Helical-bevel gearmotors 259
Helical-worm gearmotors 317
Parallel shaft helical gearmotors 191
Spiroplan® gearmotors 368
Structure of the selection tables 112
Self-locking 36
Service factor
Additional service factor 41
Determining the service factor 39
SEW service factor fB 40
SEW-EURODRIVE
group of companies 6
Products 7

Systems 7
Spiroplan® gear units
Unit designation 19
Spiroplan® gearmotors 12
Dimension sheets 372
Mounting positions 73
Selection tables 368
Structure of the selection tables 112
Versions 31
Structure of the selection tables 112
Surface protection 14

T

Technical data
Brake control BEM 394
Brake control BES 395
External braking resistors 402
Internal braking resistors 402
internal voltage supply MLU13A 396
Keypad DBG 401
Line filter MNF11A 396
MBG11A setpoint potentiometer 399
MOVIMOT® motor data 383
MWA21A setpoint converter 400
Speed control module MLG.1A 398
Voltage relay URM 395
Voltage supply MLU.1A 397
TorqLOC® hollow shaft mounting system 93
Torque arms
Available torque arms 102
Types
Helical gearmotors 24
Helical-bevel gearmotors 27
Helical-worm gearmotors 29
Parallel shaft helical gearmotors 25
Spiroplan® gearmotors 31

U

Unit designation
AC motors and options 20
Condition monitoring 19, 22
Connection options 21
Encoder 21
Example for a DR gearmotor 23
Gear units and options 17
Helical gear units 17
Helical-bevel gear units 18
Helical-worm gear units 18
Mechanical installation 21
Motor series 20
MOVIMOT® standard design 393
Options 19
Other accessories 22
Output types 20
Parallel shaft helical gear units 17
Spiroplan® gear units 19
Ventilation 21
URM 395

V

Vibration sensor
Technical data and part numbers 110
Voltage relay 395

Address Directory

Germany			
Headquarters **Production** **Sales**	**Bruchsal**	SEW-EURODRIVE GmbH & Co KG Ernst-Blickle-Straße 42 D-76646 Bruchsal P.O. Box Postfach 3023 • D-76642 Bruchsal	Tel. +49 7251 75-0 Fax +49 7251 75-1970 http://www.sew-eurodrive.de sew@sew-eurodrive.de
Production	**Graben**	SEW-EURODRIVE GmbH & Co KG Ernst-Blickle-Straße 1 D-76676 Graben-Neudorf P.O. Box Postfach 1220 • D-76671 Graben-Neudorf	Tel. +49 7251 75-0 Fax +49 7251 75-2970
	Östringen	SEW-EURODRIVE Östringen GmbH Franz-Gurk-Straße 2 D-76684 Östringen P.O. Box Postfach 1174 • D-76677 Östringen	Tel. +49 7253 92540 Fax +49 7253 925490 oestringen@sew-eurodrive.de
Service Competence Center	**Central**	SEW-EURODRIVE GmbH & Co KG Ernst-Blickle-Straße 1 D-76676 Graben-Neudorf	Tel. +49 7251 75-1710 Fax +49 7251 75-1711 sc-mitte@sew-eurodrive.de
	North	SEW-EURODRIVE GmbH & Co KG Alte Ricklinger Straße 40-42 D-30823 Garbsen (near Hannover)	Tel. +49 5137 8798-30 Fax +49 5137 8798-55 sc-nord@sew-eurodrive.de
	East	SEW-EURODRIVE GmbH & Co KG Dänkritzer Weg 1 D-08393 Meerane (near Zwickau)	Tel. +49 3764 7606-0 Fax +49 3764 7606-30 sc-ost@sew-eurodrive.de
	South	SEW-EURODRIVE GmbH & Co KG Domagkstraße 5 D-85551 Kirchheim (near München)	Tel. +49 89 909552-10 Fax +49 89 909552-50 sc-sued@sew-eurodrive.de
	West	SEW-EURODRIVE GmbH & Co KG Siemensstraße 1 D-40764 Langenfeld (near Düsseldorf)	Tel. +49 2173 8507-30 Fax +49 2173 8507-55 sc-west@sew-eurodrive.de
	Electronics	SEW-EURODRIVE GmbH & Co KG Ernst-Blickle-Straße 42 D-76646 Bruchsal	Tel. +49 7251 75-1780 Fax +49 7251 75-1769 sc-elektronik@sew-eurodrive.de
	Drive Service Hotline / 24 Hour Service		+49 180 5 SEWHELP +49 180 5 7394357
Technical Offices	**Augsburg**	SEW-EURODRIVE GmbH & Co KG August-Wessels-Straße 29 D-86156 Augsburg	Tel. +49 821 22779-10 Fax +49 821 22779-50 tb-augsburg@sew-eurodrive.de
	Berlin	SEW-EURODRIVE GmbH & Co KG Lilienthalstraße 3a D-12529 Schönefeld	Tel. +49 33762 2266-30 Fax +49 33762 2266-36 tb-berlin@sew-eurodrive.de
	Bodensee	SEW-EURODRIVE GmbH & Co KG Burgbergring 91 D-88662 Überlingen	Tel. +49 7551 9226-30 Fax +49 7551 9226-56 tb-bodensee@sew-eurodrive.de
	Bremen	SEW-EURODRIVE GmbH & Co KG Bornstr.19 ... 22 D-28195 Bremen	Tel. +49 421 33918-10 Fax +49 421 33918-22 tb-bremen@sew-eurodrive.de
	Dortmund	SEW-EURODRIVE GmbH & Co KG Hildastraße 10 D-44145 Dortmund	Tel. +49 231 912050-10 Fax +49 231 912050-20 tb-dortmund@sew-eurodrive.de
	Dresden	SEW-EURODRIVE GmbH & Co KG Hauptstraße 32 D-01445 Radebeul	Tel. +49 351 26338-0 Fax +49 351 26338-38 tb-dresden@sew-eurodrive.de

Germany			
	Erfurt	SEW-EURODRIVE GmbH & Co KG Blumenstraße 70 D-99092 Erfurt	Tel. +49 361 21709-70 Fax +49 361 21709-79 tb-erfurt@sew-eurodrive.de
	Güstrow	SEW-EURODRIVE GmbH & Co KG Am Gewerbegrund 3 D-18273 Güstrow P.O. Box Postfach 1216 • D-18262 Güstrow	Tel. +49 3843 8557-80 Fax +49 3843 8557-88 tb-guestrow@sew-eurodrive.de
	Hamburg	SEW-EURODRIVE GmbH & Co KG Bramfelder Straße 119 D-22305 Hamburg	Tel. +49 40 298109-60 Fax +49 40 298109-70 tb-hamburg@sew-eurodrive.de
	Hannover/ Garbsen	SEW-EURODRIVE GmbH & Co KG Alte Ricklinger Str.40-42 D-30823 Garbsen P.O. Box Postfach 1104 53 • D-30804 Garbsen	Tel. +49 5137 8798-10 Fax +49 5137 8798-50 tb-hannover@sew-eurodrive.de
	Heilbronn	SEW-EURODRIVE GmbH & Co KG Zeppelinstraße 7 D-74357 Bönnigheim P.O. Box Postfach 68 • D-74355 Bönnigheim	Tel. +49 7143 8738-0 Fax +49 7143 8738-25 tb-heilbronn@sew-eurodrive.de
	Herford	SEW-EURODRIVE GmbH & Co KG Radewiger Straße 21 D-32052 Herford P.O. Box Postfach 4108 • D-32025 Herford	Tel. +49 5221 9141-0 Fax +49 5221 9141-20 tb-herford@sew-eurodrive.de
	Karlsruhe	SEW-EURODRIVE GmbH & Co KG Ettlinger Weg 2 D-76467 Bietigheim P.O. Box Postfach 43 • D-76463 Bietigheim	Tel. +49 7245 9190-10 Fax +49 7245 9190-20 tb-karlsruhe@sew-eurodrive.de
	Kassel	SEW-EURODRIVE GmbH & Co KG Lange Straße 14 D-34253 Lohfelden	Tel. +49 561 95144-80 Fax +49 561 95144-90 tb-kassel@sew-eurodrive.de
	Koblenz	SEW-EURODRIVE GmbH & Co KG Bahnstraße 17a D-56743 Mendig	Tel. +49 2652 9713-30 Fax +49 2652 9713-40 tb-koblenz@sew-eurodrive.de
	Lahr	SEW-EURODRIVE GmbH & Co KG Europastraße 3/1 D-77933 Lahr / Schwarzwald	Tel. +49 7821 90999-60 Fax +49 7821 90999-79 tb-lahr@sew-eurodrive.de
	Langenfeld	SEW-EURODRIVE GmbH & Co KG Siemensstraße 1 D-40764 Langenfeld	Tel. +49 2173 8507-10 Fax +49 2173 8507-50 tb-langenfeld@sew-eurodrive.de
	Magdeburg	SEW-EURODRIVE GmbH & Co KG Breiteweg 53 D-39789 Barleben	Tel. +49 39203 7577-1 Fax +49 39203 7577-9 tb-magdeburg@sew-eurodrive.de
	Mannheim	SEW-EURODRIVE GmbH & Co KG Radeberger Straße 2 D-68309 Mannheim	Tel. +49 621 71683-10 Fax +49 621 71683-22 tb-mannheim@sew-eurodrive.de
	München	SEW-EURODRIVE GmbH & Co KG Domagkstraße 5 D-85551 Kirchheim	Tel. +49 89 90955-110 Fax +49 89 90955-150 tb-muenchen@sew-eurodrive.de
	Münster	SEW-EURODRIVE GmbH & Co KG Von-Vincke-Straße 14 D-48143 Münster	Tel. +49 251 41475-11 Fax +49 251 41475-50 tb-muenster@sew-eurodrive.de

Germany			
	Nürnberg	SEW-EURODRIVE GmbH & Co KG Plattenäckerweg 6 D-90455 Nürnberg	Tel. +49 911 98884-50 Fax +49 911 98884-60 tb-nuernberg@sew-eurodrive.de
	Regensburg	SEW-EURODRIVE GmbH & Co KG Im Gewerbepark A15 D-93059 Regensburg	Tel. +49 941 46668-68 Fax +49 941 46668-66 tb-regensburg@sew-eurodrive.de
	Rhein-Main	SEW-EURODRIVE GmbH & Co KG Niederstedter Weg 5 D-61348 Bad Homburg	Tel. +49 6172 9617-0 Fax +49 6172 9617-50 tb-rheinmain@sew-eurodrive.de
	Stuttgart	SEW-EURODRIVE GmbH & Co KG Friedrich-List-Straße 46 D-70771 Leinfelden-Echterdingen	Tel. +49 711 16072-0 Fax +49 711 16072-72 tb-stuttgart@sew-eurodrive.de
	Ulm	SEW-EURODRIVE GmbH & Co KG Dieselstraße 14 D-89160 Dornstadt	Tel. +49 7348 9885-0 Fax +49 7348 9885-90 tb-ulm@sew-eurodrive.de
	Würzburg	SEW-EURODRIVE GmbH & Co KG Nürnbergerstraße 118 D-97076 Würzburg-Lengfeld	Tel. +49 931 27886-60 Fax +49 931 27886-66 tb-wuerzburg@sew-eurodrive.de
	Zwickau / Meerane	SEW-EURODRIVE GmbH & Co KG Dänkritzer Weg1 D-08393 Meerane	Tel. +49 3764 7606-0 Fax +49 3764 7606-20 tb-zwickau@sew-eurodrive.de

France			
Production **Sales** **Service**	**Haguenau**	SEW-USOCOME 48-54, route de Soufflenheim B. P. 20185 F-67506 Haguenau Cedex	Tel. +33 3 88 73 67 00 Fax +33 3 88 73 66 00 http://www.usocome.com sew@usocome.com
Production	**Forbach**	SEW-EUROCOME Zone Industrielle Technopôle Forbach Sud B. P. 30269 F-57604 Forbach Cedex	Tel. +33 3 87 29 38 00
Assembly **Sales** **Service**	**Bordeaux**	SEW-USOCOME Parc d'activités de Magellan 62, avenue de Magellan - B. P. 182 F-33607 Pessac Cedex	Tel. +33 5 57 26 39 00 Fax +33 5 57 26 39 09
	Lyon	SEW-USOCOME Parc d'Affaires Roosevelt Rue Jacques Tati F-69120 Vaulx en Velin	Tel. +33 4 72 15 37 00 Fax +33 4 72 15 37 15
	Paris	SEW-USOCOME Zone industrielle 2, rue Denis Papin F-77390 Verneuil l'Etang	Tel. +33 1 64 42 40 80 Fax +33 1 64 42 40 88
Technical Offices	**Alsace Franche-Comté**	SEW-USOCOME 1, rue Auguste Gasser F-68360 Soultz	Tel. +33 3 89 74 51 62 Fax +33 3 89 76 58 71
	Alsace Nord	SEW-USOCOME 15, rue Mambourg F-68240 Sigolsheim	Tel. +33 3 89 78 45 11 Fax +33 3 89 78 45 12
	Aquitaine	SEW-USOCOME Parc d'activités de Magellan 62, avenue de Magellan B.P.182 F-33607 Pessac Cedex	Tel. +33 5 57 26 39 00 Fax +33 5 57 26 39 09

France			
	Ardennes Lorraine	SEW-USOCOME 1, rue de la Forêt F-54250 Champigneulles	Tel. +33 3 83 96 28 04 Fax +33 3 83 96 28 07
	Bourgogne	SEW-USOCOME 10, rue de la Poste F-71350 Saint Loup Géanges	Tel. +33 3 85 49 92 18 Fax +33 3 85 49 92 19
	Bretagne Ouest	SEW-USOCOME 4, rue des Châtaigniers F-44830 Brains	Tel. +33 2 51 70 54 04 Fax +33 2 51 70 54 05
	Centre Auvergne	SEW-USOCOME 27, avenue du Colombier F-19150 Laguenne	Tel. +33 5 55 20 12 10 Fax +33 5 55 20 12 11
	Centre Pays de Loire	SEW-USOCOME 9, rue des Erables F-37540 Saint Cyr sur Loire	Tel. +33 2 47 41 33 23 Fax +33 2 47 41 34 03
	Champagne	SEW-USOCOME Impasse des Ouises F-10120 Saint André les Vergers	Tel. +33 3 25 79 63 24 Fax +33 3 25 79 63 25
	Lyon Nord-Est	SEW-USOCOME Parc d'Affaires Roosevelt Rue Jacques Tati F-69120 Vaulx en Velin	Tel. +33 4 72 15 37 03 Fax +33 4 72 15 37 15
	Lyon Ouest	SEW-USOCOME Parc d'Affaires Roosevelt Rue Jacques Tati F-69120 Vaulx en Velin	Tel. +33 4 72 15 37 04 Fax +33 4 72 15 37 15
	Lyon Sud-Est	SEW-USOCOME Montée de la Garenne F-26750 Génissieux	Tel. +33 4 75 05 65 95 Fax +33 4 75 05 65 96
	Nord	SEW-USOCOME 30, rue Léon Garet F-62520 Le Touquet	Tel. +33 3 21 90 21 40 Fax +33 3 21 90 21 44
	Normandie	SEW-USOCOME 5 rue de la Limare F-14250 Brouay	Tel. +33 2 31 37 92 86 Fax +33 2 31 74 68 15
	Paris Est	SEW-USOCOME Résidence Le Bois de Grâce 2, allée des Souches Vertes F-77420 Champs sur Marne	Tel. +33 1 64 68 40 50 Fax +33 1 64 68 45 00
	Paris Ouest	SEW-USOCOME 42 avenue Jean Jaurès F-78580 Maule	Tel. +33 1 30 90 89 86 Fax +33 1 30 90 93 15
	Paris Picardie	SEW-USOCOME 25 bis, rue Kléber F-92300 Levallois Perret	Tel. +33 1 41 05 92 74 Fax +33 1 41 05 92 75
	Paris Sud	SEW-USOCOME 6. chemin des Bergers Lieu-dit Marchais F-91410 Roinville sous Dourdan	Tel. +33 1 60 81 10 56 Fax +33 1 60 81 10 57
	Provence	SEW-USOCOME Résidence Les Hespérides Bât. B2 67, boulevard des Alpes F-13012 Marseille	Tel. +33 4 91 18 00 11 Fax +33 4 91 18 00 12
	Pyrénées	SEW-USOCOME 179, route de Grazac F-31190 Caujac	Tel. +33 5 61 08 15 85 Fax +33 5 61 08 16 44

France			
	Sud-Atlantique	SEW-USOCOME 12, rue des Pinsons F-44120 Vertou	Tel. +33 2 40 80 32 23 Fax +33 2 40 80 32 13

Algeria			
Sales	**Alger**	Réducom 16, rue des Frères Zaghnoun Bellevue El-Harrach 16200 Alger	Tel. +213 21 8222-84 Fax +213 21 8222-84 reducom_sew@yahoo.fr

Argentina			
Assembly **Sales** **Service**	**Buenos Aires**	SEW EURODRIVE ARGENTINA S.A. Centro Industrial Garin, Lote 35 Ruta Panamericana Km 37,5 1619 Garin	Tel. +54 3327 4572-84 Fax +54 3327 4572-21 sewar@sew-eurodrive.com.ar http://www.sew-eurodrive.com.ar

Australia			
Assembly **Sales** **Service**	**Melbourne**	SEW-EURODRIVE PTY. LTD. 27 Beverage Drive Tullamarine, Victoria 3043	Tel. +61 3 9933-1000 Fax +61 3 9933-1003 http://www.sew-eurodrive.com.au enquires@sew-eurodrive.com.au
	Sydney	SEW-EURODRIVE PTY. LTD. 9, Sleigh Place, Wetherill Park New South Wales, 2164	Tel. +61 2 9725-9900 Fax +61 2 9725-9905 enquires@sew-eurodrive.com.au
	Perth	SEW-EURODRIVE PTY. LTD. 105 Robinson Avenue Belmont, W.A. 6104	Tel. +61 8 9478-2688 Fax +61 8 9277-7572 enquires@sew-eurodrive.com.au
	Brisbane	SEW-EURODRIVE PTY.LTD. 1 /34 Collinsvale St Rocklea, Queensland, 4106	Tel. +61 7 3272-7900 Fax +61 7 3272-7901 enquires@sew-eurodrive.com.au
Technical Offices	**Adelaide**	SEW-EURODRIVE PTY. LTD. Unit 1/601 Anzac Highway Glenelg, S.A. 5045	Tel. +61 8 8294-8277 Fax +61 8 8294-2893 enquires@sew-eurodrive.com.au
	Townsville	SEW-EURODRIVE PTY. LTD. 12 Leyland Street Garbutt, QLD 4814	Tel. +61 7 4779 4333 Fax +61 7 4779 5333 enquires@sew-eurodrive.com.au

Austria			
Assembly **Sales** **Service**	**Wien**	SEW-EURODRIVE Ges.m.b.H. Richard-Strauss-Strasse 24 A-1230 Wien	Tel. +43 1 617 55 00-0 Fax +43 1 617 55 00-30 http://sew-eurodrive.at sew@sew-eurodrive.at
Technical Offices	**Linz**	SEW-EURODRIVE Ges.m.b.H. Reuchlinstr. 6/3 A-4020 Linz	Tel. +43 732 655 109-0 Fax +43 732 655 109-20 tb-linz@sew-eurodrive.at
	Graz	SEW-EURODRIVE Ges.m.b.H. Grabenstraße 231 A-8045 Graz	Tel. +43 316 685 756-0 Fax +43 316 685 755 tb-graz@sew-eurodrive.at
	Dornbirn	SEW-EURODRIVE Ges.m.b.H. Lustenauerstraße 27/1 A-6850 Dornbirn	Tel. +43 5572 3725 99-0 Fax +43 5572 3725 99-20 tb-dornbirn@sew-eurodrive.at

Bangladesh			
Sales	**Dhaka**	Jainex Industrial and Engineering Ltd B 12 Apon Nibash East Nasirabad Bangladesh	Tel. +880 1713103502 Fax +880 31 613041 jainexbd@onlinectg.net

Belarus			
Sales	**Minsk**	SEW-EURODRIVE BY RybalkoStr. 26 BY-220033 Minsk	Tel.+375 (17) 298 38 50 Fax +375 (17) 29838 50 sales@sew.by

Belgium			
Assembly **Sales** **Service**	**Brüssel**	SEW Caron-Vector S.A. Avenue Eiffel 5 B-1300 Wavre	Tel. +32 10 231-311 Fax +32 10 231-336 http://www.sew-eurodrive.be info@caron-vector.be
Service Competence Center	**Industrial Gears**	SEW Caron-Vector S.A. Rue de Parc Industriel, 31 BE-6900 Marche-en-Famenne	Tel. +32 84 219-878 Fax +32 84 219-879 http://www.sew-eurodrive.be service-wallonie@sew-eurodrive.be
Technical Office	**Vlaanderen**	SEW Caron-Vector S.A. Verlorenbroodstraat, 122, bus 6 B-9820 Merelbeke	Tel. +32 92 1686 25 Fax +32 92 2741 55

Brazil			
Production **Sales** **Service**	**Sao Paulo**	SEW-EURODRIVE Brasil Ltda. Avenida Amâncio Gaiolli, 152 - Rodovia Presidente Dutra Km 208 Guarulhos - 07251-250 - SP SAT - SEW ATENDE - 0800 7700496	Tel. +55 11 6489-9133 Fax +55 11 6480-3328 http://www.sew-eurodrive.com.br sew@sew.com.br
	Additional addresses for service in Brazil provided on request!		

Bulgaria			
Sales	**Sofia**	BEVER-DRIVE GmbH Bogdanovetz Str.1 BG-1606 Sofia	Tel. +359 2 9151160 Fax +359 2 9151166 bever@fastbg.net

Cameroon			
Sales	**Douala**	Electro-Services Rue Drouot Akwa B.P. 2024 Douala	Tel. +237 33 431137 Fax +237 33 431137

Canada			
Assembly **Sales** **Service**	**Toronto**	SEW-EURODRIVE CO. OF CANADA LTD. 210 Walker Drive Bramalea, Ontario L6T3W1	Tel. +1 905 791-1553 Fax +1 905 791-2999 http://www.sew-eurodrive.ca marketing@sew-eurodrive.ca
	Vancouver	SEW-EURODRIVE CO. OF CANADA LTD. 7188 Honeyman Street Delta. B.C. V4G 1 E2	Tel. +1 604 946-5535 Fax +1 604 946-2513 marketing@sew-eurodrive.ca
	Montreal	SEW-EURODRIVE CO. OF CANADA LTD. 2555 Rue Leger LaSalle, Quebec H8N 2V9	Tel. +1 514 367-1124 Fax +1 514 367-3677 marketing@sew-eurodrive.ca
	Additional addresses for service in Canada provided on request!		

Chile			
Assembly **Sales** **Service**	**Santiago de Chile**	SEW-EURODRIVE CHILE LTDA. Las Encinas 1295 Parque Industrial Valle Grande LAMPA RCH-Santiago de Chile P.O. Box Casilla 23 Correo Quilicura - Santiago - Chile	Tel. +56 2 75770-00 Fax +56 2 75770-01 http://www.sew-eurodrive.cl ventas@sew-eurodrive.cl

China			
Production **Assembly** **Sales** **Service**	**Tianjin**	SEW-EURODRIVE (Tianjin) Co., Ltd. No. 46, 7th Avenue, TEDA Tianjin 300457	Tel. +86 22 25322612 Fax +86 22 25322611 info@sew-eurodrive.cn http://www.sew-eurodrive.cn
Assembly **Sales** **Service**	**Suzhou**	SEW-EURODRIVE (Suzhou) Co., Ltd. 333, Suhong Middle Road Suzhou Industrial Park Jiangsu Province, 215021	Tel. +86 512 62581781 Fax +86 512 62581783 suzhou@sew-eurodrive.cn
	Guangzhou	SEW-EURODRIVE (Guangzhou) Co., Ltd. No. 9, JunDa Road East Section of GETDD Guangzhou 510530	Tel. +86 20 82267890 Fax +86 20 82267891 guangzhou@sew-eurodrive.cn
	Shenyang	SEW-EURODRIVE (Shenyang) Co., Ltd. 10A-2, 6th Road Shenyang Economic Technological Development Area Shenyang, 110141	Tel. +86 24 25382538 Fax +86 24 25382580 shenyang@sew-eurodrive.cn
	Wuhan	SEW-EURODRIVE (Wuhan) Co., Ltd. 10A-2, 6th Road No. 59, the 4th Quanli Road, WEDA 430056 Wuhan	Tel. +86 27 84478398 Fax +86 27 84478388

Colombia			
Assembly **Sales** **Service**	**Bogotá**	SEW-EURODRIVE COLOMBIA LTDA. Calle 22 No. 132-60 Bodega 6, Manzana B Santafé de Bogotá	Tel. +57 1 54750-50 Fax +57 1 54750-44 http://www.sew-eurodrive.com.co sewcol@sew-eurodrive.com.co

Croatia			
Sales **Service**	**Zagreb**	KOMPEKS d. o. o. PIT Erdödy 4 II HR 10 000 Zagreb	Tel. +385 1 4613-158 Fax +385 1 4613-158 kompeks@inet.hr

Czech Republic			
Sales	**Praha**	SEW-EURODRIVE CZ S.R.O. Business Centrum Praha Lužná 591 CZ-16000 Praha 6 - Vokovice	Tel. +420 255 709 601 Fax +420 220 121 237 http://www.sew-eurodrive.cz sew@sew-eurodrive.cz
Technical Offices	**Brno**	SEW-EURODRIVE CZ S.R.O. Křenová 52 CZ -60200 Brno	Tel. +420 543256151 + 543256163 Fax +420 543256845
	Hradec Králové	SEW-EURODRIVE CZ S.R.O. Čechova 498 CZ-50202 Hradec Králové	Tel. +420 495510141 Fax +420 495521313
	Plzeň	SEW-EURODRIVE CZ S.R.O. Areal KRPA a.s. Zahradni 173/2 CZ-32600 Plzeň	Tel. +420 378775300 Fax +420 377970710
	Klatovy	SEW-EURODRIVE CZ S.R.O. Technická kancelář Klatovy Domažlická 800 CZ-33901 Klatovy	Tel. +420 376310729 Fax +420 376310725

Denmark			
Assembly **Sales** **Service**	**Kopenhagen**	SEW-EURODRIVEA/S Geminivej 28-30 DK-2670 Greve	Tel. +45 43 9585-00 Fax +45 43 9585-09 http://www.sew-eurodrive.dk sew@sew-eurodrive.dk

Egypt			
Sales **Service**	**Cairo**	Copam Egypt for Engineering & Agencies 33 El Hegaz ST, Heliopolis, Cairo	Tel. +20 2 22566-299 + 1 23143088 Fax +20 2 22594-757 http://www.copam-egypt.com/ copam@datum.com.eg

Estonia			
Sales	**Tallin**	ALAS-KUUL AS Reti tee 4 EE-75301 Peetri küla, Rae vald, Harjumaa	Tel. +372 6593230 Fax +372 6593231 veiko.soots@alas-kuul.ee

Finland			
Assembly **Sales** **Service**	**Lahti**	SEW-EURODRIVE OY Vesimäentie 4 FIN-15860 Hollola 2	Tel. +358 201 589-300 Fax +358 3 780-6211 sew@sew.fi http://www.sew-eurodrive.fi
Technical Offices	**Helsinki**	SEW-EURODRIVE OY Luutnantintie 5 FIN-00410 Helsinki	Tel. +358 201 589-300 Fax + 358 9 5666-311 sew@sew.fi
	Vaasa	SEW-EURODRIVE OY Hietasaarenkatu 18 FIN-65100 Vaasa	Tel. +358 201 589-300 Fax +358 6 3127-470 sew@sew.fi
	Rovaniemi	SEW-EURODRIVE OY Valtakatu 4 A FIN-96100 Rovaniemi	Tel. +358 201 589-300 Fax +358 201 589-239 sew@sew.fi
Production **Assembly** **Service**	**Karkkila**	SEW Industrial Gears OY Valurinkatu 6 FIN-03600 Karkkila	Tel. +358 201 589-300 Fax +358 201 589-310 sew@sew.fi http://www.sew-eurodrive.fi

Gabon			
Sales	**Libreville**	Electro-Services B.P. 1889 Libreville	Tel. +241 7340-11 Fax +241 7340-12

Great Britain			
Assembly **Sales** **Service**	**Normanton**	SEW-EURODRIVE Ltd. Beckbridge Industrial Estate P.O. Box No.1 GB-Normanton, West- Yorkshire WF6 1QR	Tel. +44 1924 893-855 Fax +44 1924 893-702 http://www.sew-eurodrive.co.uk info@sew-eurodrive.co.uk
Technical Offices	**London**	SEW-EURODRIVE Ltd. 764 Finchely Road, Temple Fortune GB-London N.W.11 7TH	Tel. +44 20 8458-8949 Fax +44 20 8458-7417
	Midlands	SEW-EURODRIVE Ltd. 5 Sugar Brook court, Aston Road, Bromsgrove, Worcs B60 3EX	Tel. +44 1527 877-319 Fax +44 1527 575-245
	Scotland	SEW-EURODRIVE Ltd. Scottish Office No 37 Enterprise House Springkerse Business Park GB-Stirling FK7 7UF Scotland	Tel. +44 17 8647-8730 Fax +44 17 8645-0223

Greece			
Sales **Service**	**Athen**	Christ. Boznos & Son S.A. 12, Mavromichali Street P.O. Box 80136, GR-18545 Piraeus	Tel. +30 2 1042 251-34 Fax +30 2 1042 251-59 http://www.boznos.gr info@boznos.gr

Greece			
Technical Office	**Thessaloniki**	Christ. Boznos & Son S.A. Maiandrou 21 562 24 Evosmos, Thessaloniki	Tel. +30 2 310 7054-00 Fax +30 2 310 7055-15 info@boznos.gr

Hong Kong			
Assembly **Sales** **Service**	**Hong Kong**	SEW-EURODRIVE LTD. Unit No. 801-806, 8th Floor Hong Leong Industrial Complex No. 4, Wang Kwong Road Kowloon, Hong Kong	Tel. +852 2 7960477 + 79604654 Fax +852 2 7959129 contact@sew-eurodrive.hk

Hungary			
Sales **Service**	**Budapest**	SEW-EURODRIVE Kft. H-1037 Budapest Kunigunda u. 18	Tel. +36 1 437 06-58 Fax +36 1 437 06-50 office@sew-eurodrive.hu

Iceland			
Sales	**Reykjavik**	Vélaverk ehf. Bolholti 8, 3h. IS - 105 Reykjavik	Tel. +354 568 3536 Fax +354 568 3537 velaverk@velaverk.is

India			
Assembly **Sales** **Service**	**Vadodara**	SEW-EURODRIVE India Private Limited Plot No. 4, GIDC POR Ramangamdi • Vadodara - 391 243 Gujarat	Tel. +91 265 2831086 Fax +91 265 2831087 http://www.seweurodriveindia.com sales@seweurodriveindia.com subodh.ladwa@seweurodriveindia.com
Technical Offices	**Bangalore**	SEW-EURODRIVE India Private Limited 308, Prestige Centre Point 7, Edward Road Bangalore - 560052 - Karnataka	Tel. +91 80 22266565 Fax +91 80 22266569 salesbang@seweurodriveindia.com ganesh@seweurodriveindia.com
	Kolkata	SEW EURODRIVE India Private Limited 2nd floor, Room No. 35 Chowringhee Court 55, Chowringhee Road Kolkata - 700 071 - West Bengal	Tel. +91 33 22827457 Fax +91 33 22894204 saleskal@seweurodriveindia.com a.j.biswas@seweurodriveindia.com
	Chandigarh	SEW EURODRIVE India Private Limited Sujit Kumar Mishra H.No.5464/3 Modern Housing Complex Manimajra Chandigarh -160101	Tel. +91 9878469579 Fax +91 1722738664 saleschand@seweurodriveindia.com
	Chennai	SEW-EURODRIVE India Private Limited 2nd Floor, Josmans Complex, No. 5, McNichols Road, Chetpet Chennai - 600031 - Tamil Nadu	Tel. +91 44 42849813 Fax +91 44 42849816 saleschen@seweurodriveindia.com c.v.shivkumar@seweurodriveindia.com
	Coimbatore	SEW-EURODRIVE India Private Limited Office No 60 Arpee Centre (Opp Annapoorna Hotel) 420 N, NSR Road, Saibaba Colony Coimbatore 641 0111 - Tamil Nadu	Tel. +91 422 2455420 Fax +91 422 2443988 salescmb@seweurodriveindia.com p.selvakumar@seweurodriveindia.com
	Madgaon	SEW-EURODRIVE India Private Limited Flat No.-G1, Shivas-Laxmi Prasad Co-Operative Housing Society, Padmanarayan Estate, Near Jivottaam Math, Gagole Madgao, Goa - 403 602	samrat.chakravorty@seweurodriveindia.com

India			
	Hyderabad	SEW-EURODRIVE India Private Limited 408, 4th Floor, Meridian Place Green Park Road Amerpeet Hyderabad - 500016 - Andhra Pradesh	Tel. +91 40 23414698 Fax +91 40 23413884 saleshyd@seweurodriveindia.com ma.choudary@seweurodriveindia.com
	Jamshedpur	SEW-EURODRIVE India Private Limited Flat No.: B/2, B.S. Apartment Road No.: 4, Contractor's area, Bistupur Jamshedpur 831 001 - Jharkhand	Tel. +91 9934123671 siddhartha.mishra@seweurodriveindia.com
	Mumbai	SEW-EURODRIVE India Private Limited 312 A, 3rd Floor, Acme Plaza, J.B. Nagar, Andheri Kurla Road, Andheri (E) Mumbai - 400059 - Maharashtra	Tel. +91 22 28348440 Fax +91 22 28217858 salesmumbai@seweurodriveindia.com p.s.ray@seweurodriveindia.com
	New Delhi	SEW-EURODRIVE India Private Limited 418-419, Suneja Tower-1 District Centre, Janak Puri New Delhi 110 058	Tel. +91 11 25544111 Fax +91 11 25544113 salesdelhi@seweurodriveindia.com vikram.juneja@seweurodriveindia.com
	Pune	SEW-EURODRIVE India Private Limited Office No. 2 & 7, First Floor, Triveni Apartment Model Colony, Gokhale Road Pune 411016 - Maharashtra	Tel. +91 20 25671751 Fax +91 20 25661668 salespune@seweurodriveindia.com praveen.hosur@seweurodriveindia.com
	Raipur	SEW-EURODRIVE India Private Limited Flat No-0-102, First Floor Satyam Appt., Golchha Park Nr Mining Office, Ring Road-1 Raipur 492 001 - Chhattisgarh	Tel. +91 9893290624 sutanu.sarkar@seweurodriveindia.com

Indonesia			
Technical Office	**Jakarta**	SEW-EURODRIVE Pte Ltd. Jakarta Liaison Office, Menara Graha Kencana Jl. Perjuangan No. 88, LT 3 B, Kebun Jeruk, Jakarta 11530, Indonesia	Tel. +62 21 5359066 Fax +62 21 5363686 Service Hotline: +65 61000 739 sew@cbn.net.id

Ireland			
Sales **Service**	**Dublin**	Alperton Engineering Ltd. 48 Moyle Road Dublin Industrial Estate Glasnevin, Dublin 11	Tel. +353 1 830-6277 Fax +353 1 830-6458 info@alperton.ie http://www.alperton.ie

Israel			
Sales	**Tel-Aviv**	Liraz Handasa Ltd. Ahofer Str 34B / 228 58858 Holon	Tel. +972 3 5599511 Fax +972 3 5599512 http://www.liraz-handasa.co.il office@liraz-handasa.co.il

Italy			
Assembly **Sales** **Service**	**Milano**	SEW-EURODRIVE di R. Blickle & Co.s.a.s. Via Bernini,14 I-20020 Solaro (Milano)	Tel. +39 02 96 9801 Fax +39 02 96 799781 http://www.sew-eurodrive.it sewit@sew-eurodrive.it
Technical Offices	**Bologna**	SEW-EURODRIVE di R. Blickle & Co.s.a.s. Via della Grafica, 47 I-40064 Ozzano dell'Emilia (Bo)	Tel. +39 051 65-23-801 Fax +39 051 796-595
	Caserta	SEW-EURODRIVE di R. Blickle & Co.s.a.s. Viale Carlo III Km. 23,300 I-81020 S. Nicola la Strada (Caserta)	Tel. +39 0823 219011 Fax +39 0823 421414

Italy			
	Firenze	RIMA Via Einstein, 14 I-50013 Campi Bisenzio (Firenze)	Tel. +39 055 898 58-21 Fax +39 055 898 58-30
	Pescara	SEW-EURODRIVE di R. Blickle & Co.s.a.s. Viale Europa,132 I-65010 Villa Raspa di Spoltore (PE)	Tel. +39 085 41-59-427 Fax +39 085 41-59-643
	Torino	SEW-EURODRIVE di R. Blickle & Co.s.a.s. Filiale Torino c.so Unione Sovietica 612/15 - int. C I-11035 Torino	Tel. +39 011 3473780 Fax +39 011 3473783
	Verona	SEW-EURODRIVE di R. Blickle & Co.s.a.s. Via P. Sgulmero, 27/A I-37132 Verona	Tel. +39 045 89-239-11 Fax +39 045 97-6079

Ivory Coast			
Sales	**Abidjan**	SICA Ste industrielle et commerciale pour l'Afrique 165, Bld de Marseille B.P. 2323, Abidjan 08	Tel. +225 2579-44 Fax +225 2584-36

Japan			
Assembly **Sales** **Service**	**Iwata**	SEW-EURODRIVE JAPAN CO., LTD 250-1, Shimoman-no, Iwata Shizuoka 438-0818	Tel. +81 538 373811 Fax +81 538 373814 http://www.sew-eurodrive.co.jp sewjapan@sew-eurodrive.co.jp
Technical Offices	**Fukuoka**	SEW-EURODRIVE JAPAN CO., LTD. C-go, 5th-floor, Yakuin-Hiruzu-Bldg. 1-5-11, Yakuin, Chuo-ku Fukuoka, 810-0022	Tel. +81 92 713-6955 Fax +81 92 713-6860 sewkyushu@jasmine.ocn.ne.jp
	Osaka	SEW-EURODRIVE JAPAN CO., LTD. B-Space EIRAI Bldg., 3rd Floor 1-6-9 Kyoumachibori, Nishi-ku, Osaka, 550-0003	Tel. +81 6 6444--8330 Fax +81 6 6444--8338 sewosaka@crocus.ocn.ne.jp
	Tokyo	SEW-EURODRIVE JAPAN CO., LTD. Izumi-Bldg. 5 F 3-2-15 Misaki-cho Chiyoda-ku, Tokyo 101-0061	Tel. +81 3 3239-0469 Fax +81 3 3239-0943 sewtokyo@basil.ocn.ne.jp

Korea			
Assembly **Sales** **Service**	**Ansan-City**	SEW-EURODRIVE KOREA CO., LTD. B 601-4, Banweol Industrial Estate 1048-4, Shingil-Dong Ansan 425-120	Tel. +82 31 492-8051 Fax +82 31 492-8056 http://www.sew-korea.co.kr master@sew-korea.co.kr
	Busan	SEW-EURODRIVE KOREA Co., Ltd. No. 1720 - 11, Songjeong - dong Gangseo-ku Busan 618-270	Tel. +82 51 832-0204 Fax +82 51 832-0230 master@sew-korea.co.kr
Technical Offices	**Daegu**	SEW-EURODRIVE KOREA Co., Ltd. No.1108 Sungan officetel 87-36, Duryu 2-dong, Dalseo-ku Daegu 704-712	Tel. +82 53 650-7111 Fax +82 53 650-7112
	DaeJeon	SEW-EURODRIVE KOREA Co., Ltd. No. 1502, Hongin officetel 536-9, Bongmyung-dong, Yusung-ku Daejeon 305-301	Tel. +82 42 828-6461 Fax +82 42 828-6463

Korea			
	Kwangju	SEW-EURODRIVE KOREA Co., Ltd. 4fl., Dae-Myeong B/D 96-16 Unam-dong, Buk-ku Kwangju 500-170	Tel. +82 62 511-9172 Fax +82 62 511-9174
	Seoul	SEW-EURODRIVE KOREA Co., Ltd. No.504 Sunkyung officetel 106-4 Kuro 6-dong, Kuro-ku Seoul 152-054	Tel. +82 2 862-8051 Fax +82 2 862-8199

Latvia			
Sales	**Riga**	SIA Alas-Kuul Katlakalna 11C LV-1073 Riga	Tel. +371 7139253 Fax +371 7139386 http://www.alas-kuul.com info@alas-kuul.com

Lebanon			
Sales	**Beirut**	Gabriel Acar & Fils sarl B. P. 80484 Bourj Hammoud, Beirut	Tel. +961 1 4947-86 +961 1 4982-72 +961 3 2745-39 Fax +961 1 4949-71 gacar@beirut.com

Lithuania			
Sales	**Alytus**	UAB Irseva Naujoji 19 LT-62175 Alytus	Tel. +370 315 79204 Fax +370 315 56175 info@irseva.lt http://www.sew-eurodrive.lt

Luxembourg			
Assembly **Sales** **Service**	**Brüssel**	CARON-VECTOR S.A. Avenue Eiffel 5 B-1300 Wavre	Tel. +32 10 231-311 Fax +32 10 231-336 http://www.sew-eurodrive.lu info@caron-vector.be

Malaysia			
Assembly **Sales** **Service**	**Johore**	SEW-EURODRIVE SDN BHD No. 95, Jalan Seroja 39, Taman Johor Jaya 81000 Johor Bahru, Johor West Malaysia	Tel. +60 7 3549409 Fax +60 7 3541404 sales@sew-eurodrive.com.my
Technical Offices	**Kota Kinabalu**	SEW-EURODRIVE Sdn Bhd (Kota Kinabalu Branch) Lot No. 2,1st Floor, Inanam Baru Phase III, Miles 5.1 /2, Jalan Tuaran, Inanam 89350 Kota Kinabalu Sabah, Malaysia	Tel. +60 88 424792 Fax +60 88 424807
	Kuala Lumpur	SEW-EURODRIVE Sdn. Bhd. No. 2, Jalan Anggerik Mokara 31/46 Kota Kemuning Seksyen 31 40460 Shah Alam Selangor Darul Ehsan	Tel. +60 3 5229633 Fax +60 3 5229622 sewpjy@po.jaring.my
	Kuching	SEW-EURODRIVE Sdn. Bhd. Lot 268, Section 9 KTLD Lorong 9, Jalan Satok 93400 Kuching, Sarawak East Malaysia	Tel. +60 82 232380 Fax +60 82 242380

Malaysia			
	Penang	SEW-EURODRIVE Sdn. Bhd. No. 38, Jalan Bawal Kimsar Garden 13700 Prai, Penang	Tel. +60 4 3999349 Fax +60 4 3999348 seweurodrive@po.jaring.my

Mauritania			
Sales	**Zouérate**	AFRICOM - SARL En Face Marché Dumez P.B. 88 Zouérate	Tel. +222 54 40134 Fax +222 54 40538 cybertiris@mauritel.mr

Mexico			
Assembly **Sales** **Service**	**Queretaro**	SEW-EURODRIVE MEXIKO SA DE CV SEM-981118-M93 Tequisquiapan No. 102 Parque Industrial Queretaro C.P. 76220 Queretaro, Mexico	Tel. +52 442 1030-300 Fax +52 442 1030-301 http://www.sew-eurodrive.com.mx scmexico@seweurodrive.com.mx

Morocco			
Sales	**Casablanca**	Afit 5, rue Emir Abdelkader MA 20300 Casablanca	Tel. +212 22618372 Fax +212 22618351 ali.alami@premium.net.ma

Netherlands			
Assembly **Sales** **Service**	**Rotterdam**	VECTOR Aandrijftechniek B.V. Industrieweg 175 NL-3044 AS Rotterdam Postbus 10085 NL-3004 AB Rotterdam	Tel. +31 10 4463-700 Fax +31 10 4155-552 http://www.vector.nu info@vector.nu

New Zealand			
Assembly **Sales** **Service**	**Auckland**	SEW-EURODRIVE NEW ZEALAND LTD. P.O. Box 58-428 82 Greenmount drive East Tamaki Auckland	Tel. +64 9 2745627 Fax +64 9 2740165 http://www.sew-eurodrive.co.nz sales@sew-eurodrive.co.nz
	Christchurch	SEW-EURODRIVE NEW ZEALAND LTD. 10 Settlers Crescent, Ferrymead Christchurch	Tel. +64 3 384-6251 Fax +64 3 384-6455 sales@sew-eurodrive.co.nz
Technical Office	**Palmerston North**	SEW-EURODRIVE NEW ZEALAND LTD. C/-Grant Shearman, RD 5, Aronui Road Palmerston North	Tel. +64 6 355-2165 Fax +64 6 355-2316 sales@sew-eurodrive.co.nz

Norway			
Assembly **Sales** **Service**	**Moss**	SEW-EURODRIVE A/S Solgaard skog 71 N-1599 Moss	Tel. +47 69 24 10 20 Fax +47 69 24 10 40 http://www.sew-eurodrive.no sew@sew-eurodrive.no

Peru			
Assembly **Sales** **Service**	**Lima**	SEW DEL PERU MOTORES REDUCTORES S.A.C. Los Calderos, 120-124 Urbanizacion Industrial Vulcano, ATE, Lima	Tel. +51 1 3495280 Fax +51 1 3493002 http://www.sew-eurodrive.com.pe sewperu@sew-eurodrive.com.pe

Philippines			
Technical Office	**Manila**	SEW-EURODRIVE Pte Ltd Manila Liaison Office Suite 110, Ground Floor Comfoods Building Senator Gil Puyat Avenue 1200 Makati City	Tel. +63 2 894275254 Fax +63 2 8942744 sewmla@i-next.net

Poland			
Assembly **Sales** **Service**	**Lodz**	SEW-EURODRIVE Polska Sp.z.o.o. ul. Techniczna 5 PL-92-518 Łódź	Tel. +48 42 67710-90 Fax +48 42 67710-99 http://www.sew-eurodrive.pl sew@sew-eurodrive.pl
		24 Hour Service	Tel. +48 602 739 739 (+48 602 SEW SEW) sewis@sew-eurodrive.pl
Technical Office	**Tychy**	SEW-EURODRIVE Polska Sp.z.o.o. ul. Nad Jeziorem 87 PL-43-100 Tychy	Tel. +48 32 2175026 + 32 2175027 Fax +48 32 2277910
	Bydgoszcz	SEW-EURODRIVE Polska Sp.z.o.o. ul. Fordońska 246 PL-85-959 Bydgoszcz	Tel. +48 52 3606590 Fax +48 52 3606591
	Poznan	SEW-EURODRIVE Polska Sp.z.o.o. ul. Romana Maya 1 PL-61-371 Poznań	Tel. +48 61 8741640 Fax +48 61 8741641
	Szczecinek	SEW-EURODRIVE Polska Sp.z.o.o. ul. Mickiewicza 2 pok. 36 PL-78-400 Szczecinek	Tel. +48 94 3728820 Fax +48 94 3728821

Portugal			
Assembly **Sales** **Service**	**Coimbra**	SEW-EURODRIVE, LDA. Apartado 15 P-3050-901 Mealhada	Tel. +351 231 20 9670 Fax +351 231 20 3685 http://www.sew-eurodrive.pt infosew@sew-eurodrive.pt
Technical Offices	**Lisboa**	SEW-EURODRIVE, LDA. Núcleo Empresarial I de São Julião do Tojal Rua de Entremuros, 54 Fracção I P-2660-533 São Julião do Tojal	Tel. +351 21 958-0198 Fax +351 21 958-0245 esc.lisboa@sew-eurodrive.pt
	Porto	SEW-EURODRIVE, LDA. Av. 25 de Abril, 68 4440-502 Valongo	Tel. +351 229 350 383 Fax +351 229 350 384 MobilTel. +351 9 32559110 esc.porto@sew-eurodrive.pt

Romania			
Sales **Service**	**Bucureşti**	Sialco Trading SRL str. Madrid nr.4 011785 Bucuresti	Tel. +40 21 230-1328 Fax +40 21 230-7170 sialco@sialco.ro

Russia			
Assembly **Sales** **Service**	**St. Petersburg**	ZAO SEW-EURODRIVE P.O. Box 36 195220 St. Petersburg Russia	Tel. +7 812 3332522 +7 812 5357142 Fax +7 812 3332523 http://www.sew-eurodrive.ru sew@sew-eurodrive.ru
Technical Office	**Yekaterinburg**	ZAO SEW-EURODRIVE Kominterna Str. 16 Office 614 RUS-620078 Ekaterinburg	Tel. +7 343 310 3977 Fax +7 343 310 3978 eso@sew-eurodrive.ru

Russia			
	Irkutsk	ZAO SEW-EURODRIVE 5-Armii Str., 31 RUS-664011 Irkutsk	Tel. +7 3952 25 5880 Fax +7 3952 25 5881 iso@sew-eurodrive.ru
	Moskau	ZAO SEW-EURODRIVE RUS-107023 Moskau	Tel. +7 495 9337090 Fax +7 495 9337094 mso@sew-eurodrive.ru
	Novosibirsk	ZAO SEW-EURODRIVE pr. K Marksa, d.30 RUS-630087 Novosibirsk	Tel. +7 383 3350200 Fax +7 383 3462544 nso@sew-eurodrive.ru
	Togliatti	ZAO SEW-EURODRIVE Sportivnaya Str. 4B, office 2 Samarskaya obl. RUS-445057 Togliatti	Tel. +7 8482 710529 Fax +7 8482 810590

Senegal			
Sales	**Dakar**	SENEMECA Mécanique Générale Km 8, Route de Rufisque B.P. 3251, Dakar	Tel. +221 338 494 770 Fax +221 338 494 771 senemeca@sentoo.sn

Serbia			
Sales	**Beograd**	DIPAR d.o.o. Ustanicka 128a PC Košum, IV floor SCG-11000 Beograd	Tel. +381 11 347 3244 / +381 11 288 0393 Fax +381 11 347 1337 office@dipar.co.yu

Singapore			
Assembly **Sales** **Service**	**Singapore**	SEW-EURODRIVE PTE. LTD. No 9, Tuas Drive 2 Jurong Industrial Estate Singapore 638644	Tel. +65 68621701 Fax +65 68612827 http://www.sew-eurodrive.com.sg sewsingapore@sew-eurodrive.com

Slovakia			
Sales	**Bratislava**	SEW-Eurodrive SK s.r.o. Rybničná 40 SK-831 06 Bratislava	Tel. +421 2 33595 202 Fax +421 2 33595 200 sew@sew-eurodrive.sk http://www.sew-eurodrive.sk
	Žilina	SEW-Eurodrive SK s.r.o. Industry Park – PChZ ulica M.R.Štefánika 71 SK-010 01 Žilina	Tel. +421 41 700 2513 Fax +421 41 700 2514 sew@sew-eurodrive.sk
	Banská Bystrica	SEW-Eurodrive SK s.r.o. Rudlovská cesta 85 SK-974 11 Banská Bystrica	Tel. +421 48 414 6564 Fax +421 48 414 6566 sew@sew-eurodrive.sk
	Košice	SEW-Eurodrive SK s.r.o. Slovenská ulica 26 SK-040 01 Košice	Tel. +421 55 671 2245 Fax +421 55 671 2254 sew@sew-eurodrive.sk

Slovenia			
Sales **Service**	**Celje**	Pakman - Pogonska Tehnika d.o.o. UI. XIV. divizije 14 SLO - 3000 Celje	Tel. +386 3 490 83-20 Fax +386 3 490 83-21 pakman@siol.net

South Africa			
Assembly **Sales** **Service**	**Johannesburg**	SEW-EURODRIVE (PROPRIETARY) LIMITED Eurodrive House Cnr. Adcock Ingram and Aerodrome Roads Aeroton Ext. 2 Johannesburg 2013 P.O.Box 90004 Bertsham 2013	Tel. +27 11 248-7000 Fax +27 11 494-3104 http://www.sew.co.za dross@sew.co.za
	Capetown	SEW-EURODRIVE (PROPRIETARY) LIMITED Rainbow Park Cnr. Racecourse & Omuramba Road Montague Gardens Cape Town P.O.Box 36556 Chempet 7442 Cape Town	Tel. +27 21 552-9820 Fax +27 21 552-9830 Telex 576 062 dswanepoel@sew.co.za
	Durban	SEW-EURODRIVE (PROPRIETARY) LIMITED 2 Monaceo Place Pinetown Durban P.O. Box 10433, Ashwood 3605	Tel. +27 31 700-3451 Fax +27 31 700-3847 dtait@sew.co.za
	Nelspruit	SEW-EURODRIVE (PTY) LTD. 7 Christie Crescent Vintonia P.O.Box 1942 Nelspruit 1200	Tel. +27 13 752-8007 Fax +27 13 752-8008 robermeyer@sew.co.za
Technical Offices	**Port Elizabeth**	SEW-EURODRIVE PTY LTD. 8 Ruan Access Park Old Cape Road Greenbushes 6000 Port Elizabeth	Tel. +27 41 3722246 Fax +27 41 3722247 dtait@sew.co.za
	Richards Bay	SEW-EURODRIVE PTY LTD. 25 Eagle Industrial Park Alton Richards Bay P.O. Box 458 Richards Bay 3900	Tel. +27 35 797-3805 Fax +27 35 797-3819 dtait@sew.co.za

Spain			
Assembly **Sales** **Service**	**Bilbao**	SEW-EURODRIVE ESPAÑA, S.L. Parque Tecnológico, Edificio, 302 E-48170 Zamudio (Vizcaya)	Tel. +34 94 43184-70 Fax +34 94 43184-71 http://www.sew-eurodrive.es sew.spain@sew-eurodrive.es
Technical Offices	**Barcelona**	Delegación Barcelona Avenida Francesc Maciá 40-44 Oficina 4.2 E-08208 Sabadell (Barcelona)	Tel. +34 93 7162200 Fax +34 93 7233007
	Lugo	Delegación Noroeste Apartado, 1003 E-27080 Lugo	Tel. +34 639 403348 Fax +34 982 202934
	Madrid	Delegación Madrid Gran Via. 48-2° A-D E-28220 Majadahonda (Madrid)	Tel. +34 91 6342250 Fax +34 91 6340899
	Seville	MEB Pólogono Calonge, C/A Nave 2 - C E-41.077 Sevilla	Tel. +34 954 356 361 Fax +34 954 356 274 mebsa.sevilla@mebsa.com
	Valencia	MEB Músico Andreu i Piqueres, 4 E-46.900 Torrente (Valencia)	Tel. +34 961 565 493 Fax +34 961 566 688 mebsa.valencia@mebsa.com

Sri Lanka			
Sales	**Colombo**	SM International (Pte) Ltd 254, Galle Raod Colombo 4, Sri Lanka	Tel. +94 1 2584887 Fax +94 1 2582981

Sweden			
Assembly **Sales** **Service**	**Jönköping**	SEW-EURODRIVE AB Gnejsvägen 6-8 S-55303 Jönköping Box 3100 S-55003 Jönköping	Tel. +46 36 3442 00 Fax +46 36 3442 80 http://www.sew-eurodrive.se info@sew-eurodrive.se
Technical Offices	**Göteborg**	SEW-EURODRIVE AB Gustaf Werners gata 8 S-42132 Västra Frölunda	Tel. +46 31 70968 80 Fax +46 31 70968 93
	Malmö	SEW-EURODRIVE AB Borrgatan 5 S-21124 Malmö	Tel. +46 40 68064 80 Fax +46 40 68064 93
	Stockholm	SEW-EURODRIVE AB Björkholmsvägen 10 S-14146 Huddinge	Tel. +46 8 44986 80 Fax +46 8 44986 93
	Skellefteå	SEW-EURODRIVE AB Trädgårdsgatan 8 S-93131 Skellefteå	Tel. +46 910 7153 80 Fax +46 910 7153 93

Switzerland			
Assembly **Sales** **Service**	**Basel**	Alfred Imhof A.G. Jurastrasse 10 CH-4142 Münchenstein bei Basel	Tel. +41 61 417 1717 Fax +41 61 417 1700 http://www.imhof-sew.ch info@imhof-sew.ch
Technical Offices	**Rhaetian Switzerland**	André Gerber Es Perreyres CH-1436 Chamblon	Tel. +41 24 445 3850 Fax +41 24 445 4887
	Bern / Solothurn	Rudolf Bühler Muntersweg 5 CH-2540 Grenchen	Tel. +41 32 652 2339 Fax +41 32 652 2331
	Central Switzerland and Ticino	Beat Lütolf Baumacher 11 CH-6244 Nebikon	Tel. +41 62 756 4780 Fax +41 62 756 4786
	Zürich	René Rothenbühler Nörgelbach 7 CH-8493 Saland	Tel. +41 52 386 3150 Fax +41 52 386 3213
	Bodensee and East Switzerland	Markus Künzle Eichweg 4 CH-9403 Goldach	Tel. +41 71 845 2808 Fax +41 71 845 2809

Taiwan (R.O.C.)			
Sales	**Nan Tou**	Ting Shou Trading Co., Ltd. No. 55 Kung Yeh N. Road Industrial District Nan Tou 540	Tel. +886 49 255353 Fax +886 49 257878
	Taipei	Ting Shou Trading Co., Ltd. 6F-3, No. 267, Sec. 2 Tung Hwa South Road, Taipei	Tel. +886 2 27383535 Fax +886 2 27368268 Telex 27 245 sewtwn@ms63.hinet.net

Thailand			
Assembly **Sales** **Service**	**Chonburi**	SEW-EURODRIVE (Thailand) Ltd. 700/456, Moo.7, Donhuaroh Muang Chonburi 20000	Tel. +66 38 454281 Fax +66 38 454288 sewthailand@sew-eurodrive.com
Technical Offices	**Bangkok**	SEW-EURODRIVE (Thailand) Ltd. 6th floor, TPS Building 1023, Phattanakarn Road Suanluang Bangkok,10250	Tel. +66 2 7178149 Fax +66 2 7178152 sewthailand@sew-eurodrive.com
	Hadyai	SEW-EURODRIVE (Thailand) Ltd. Hadyai Country Home Condominium 59/101 Soi.17/1 Rachas-Utid Road. Hadyai, Songkhla 90110	Tel. +66 74 359441 Fax +66 74 359442 sewthailand@sew-eurodrive.com
	Khonkaen	SEW-EURODRIVE (Thailand) Ltd. 4th Floor, Kaow-U-HA MOTOR Bldg, 359/2, Mitraphab Road. Muang District Khonkaen 40000	Tel. +66 43 225745 Fax +66 43 324871 sew-thailand@sew-eurodrive.com

Tunisia			
Sales	**Tunis**	T. M.S. Technic Marketing Service 5, Rue El Houdaibiah 1000 Tunis	Tel. +216 71 4340-64 + 71 4320-29 Fax +216 71 4329-76 tms@tms.com.tn

Turkey			
Assembly **Sales** **Service**	**Istanbul**	SEW-EURODRIVE Hareket Sistemleri San. ve Tic. Ltd. Sti. Bagdat Cad. Koruma Cikmazi No. 3 TR-34846 Maltepe ISTANBUL	Tel. +90 216 4419164, 3838014, 3738015 Fax +90 216 3055867 http://www.sew-eurodrive.com.tr sew@sew-eurodrive.com.tr
Technical Offices	**Adana**	SEW-EURODRIVE Hareket Sistemleri San. ve Tic. Ltd. Sti. Kizilay Caddesi 8 Sokak No 6 Daðtekin Is Merkezi Kat 4 Daire 2 TR-01170 SEYHAN / ADANA	Tel. +90 322 359 94 15 Fax +90 322 359 94 16
	Ankara	SEW-EURODRIVE Hareket Sistemleri San. ve Tic. Ltd. Sti. Özcelik Is Merkezi, 14. Sok, No. 4/42 TR-06370 Ostim/Ankara	Tel. +90 312 3853390 / +90 312 3544715 / +90 312 3546109 Fax +90 312 3853258
	Bursa	SEW-EURODRIVE Hareket Sistemleri San. ve Tic. Ltd. Sti. Besevler Küçük Sanayi Parkoop Parçacilar Sitesi 48. Sokak No. 47 TR Nilüfer/Bursa	Tel. +90 224 443 4556 Fax +90 224 443 4558
	Izmir	SEW-EURODRIVE Hareket Sistemleri San. ve Tic. Ltd. Sti. 1203/11 Sok. No. 4/613 Hasan Atli Is Merkezi TR-35110 Yenisehir-Izmir	Tel. +90 232 4696264 Fax +90 232 4336105

Ukraine			
Sales **Service**	**Dnepropetrovsk**	SEW-EURODRIVE Str. Rabochaja 23-B, Office 409 49008 Dnepropetrovsk	Tel. +380 56 370 3211 Fax +380 56 372 2078 http://www.sew-eurodrive.ua sew@sew-eurodrive.ua

Ukraine			
Sales	**Kiev**	SEW-EURODRIVE GmbH S. Oleynika str. 21 02068 Kiev	Tel. +380 44 503 95 77 Fax +380 44 503 95 78 kso@sew-eurodrive.ua
	Donetsk	SEW-EURODRIVE GmbH 25th anniversary of RKKA av. 1-B, of. 805 Donetsk 83000	Tel. +380 62 38 80 545 Fax +380 62 38 80 533 dso@sew-eurodrive.ua

Uruguay			
Sales	**Montevideo**	SEW-EURODRIVE Uruguay, S. A. German Barbato 1526 CP 11200 Montevideo	Tel. +598 2 90181-89 Fax +598 2 90181-88 sewuy@sew-eurodrive.com.uy

USA			
Production **Assembly** **Sales** **Service** **Cooporate Offices**	**Southeast Region**	SEW-EURODRIVE INC. 1295 Old Spartanburg Highway P.O. Box 518 Lyman, S.C. 29365	Tel. +1 864 439-7537 Fax Sales +1 864 439-7830 Fax Manufacturing +1 864 439-9948 Fax Assembly +1 864 439-0566 Fax Confidential/HR +1 864 949-5557 http://www.seweurodrive.com cslyman@seweurodrive.com
Assembly **Sales** **Service**	**Northeast Region**	SEW-EURODRIVE INC. Pureland Ind. Complex 2107 High Hill Road, P.O. Box 481 Bridgeport, New Jersey 08014	Tel. +1 856 467-2277 Fax +1 856 845-3179 csbridgeport@seweurodrive.com
	Midwest Region	SEW-EURODRIVE INC. 2001 West Main Street Troy, Ohio 45373	Tel. +1 937 335-0036 Fax +1 937 440-3799 cstroy@seweurodrive.com
	Southwest Region	SEW-EURODRIVE INC. 3950 Platinum Way Dallas, Texas 75237	Tel. +1 214 330-4824 Fax +1 214 330-4724 csdallas@seweurodrive.com
	Western Region	SEW-EURODRIVE INC. 30599 San Antonio St. Hayward, CA 94544	Tel. +1 510 487-3560 Fax +1 510 487-6433 cshayward@seweurodrive.com
	Additional addresses for service in the USA provided on request!		

Venezuela			
Assembly **Sales** **Service**	**Valencia**	SEW-EURODRIVE Venezuela S.A. Av. Norte Sur No. 3, Galpon 84-319 Zona Industrial Municipal Norte Valencia, Estado Carabobo	Tel. +58 241 832-9804 Fax +58 241 838-6275 http://www.sew-eurodrive.com.ve ventas@sew-eurodrive.com.ve sewfinanzas@cantv.net

Order information for AC gearmotors

The following example shows the technical information required for placing an order for AC gearmotors. The data in the order has to be given starting from the output side of the unit.

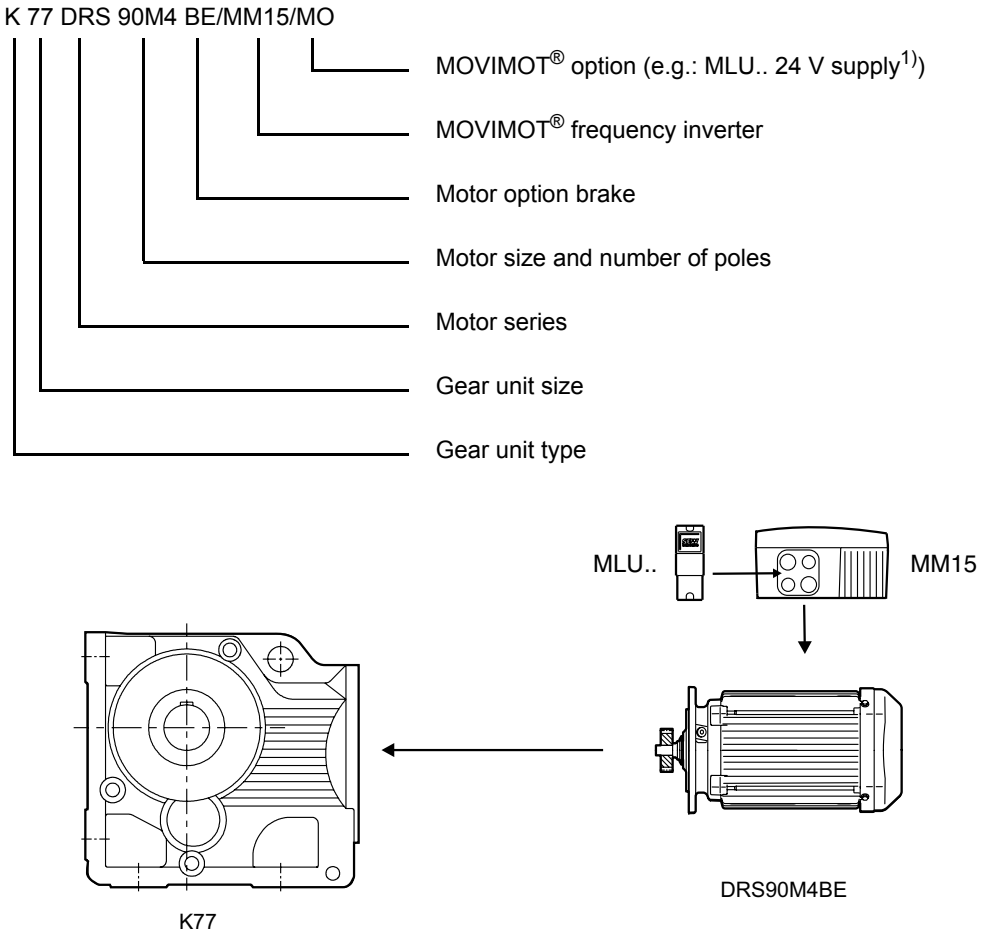

1) Only options installed at the factory are listed on the nameplate

The following data is also required depending on the gear unit series and gear unit type:

Type (examples)	Mounting position	Shaft position	Flange position	Position of MOVIMOT® inverter	Direction of output rotation
K47 DRS71M4/MM07/RS	M2	A	-	0°	CW
SF77 DRS90L4/MM22	M6	AB	AB	90°	-
KA97 DRE100LC4/MM40	M4	B	-	270°	-
KH107 DRE132S4/MM40	M1	A	-	180°	-
WF20 DRS71S4/MM03	-	A	A	0°	

Overview of mounting positions*

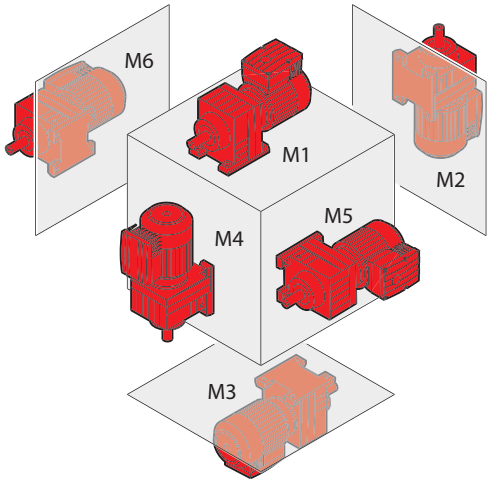

R..

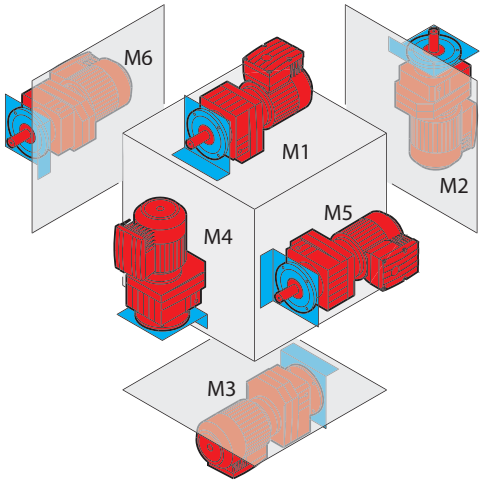

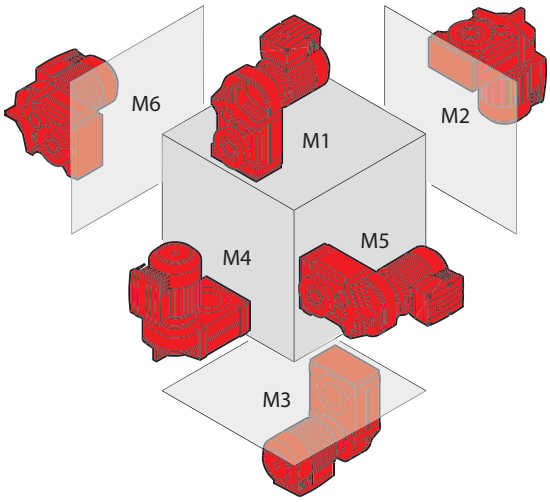

F..

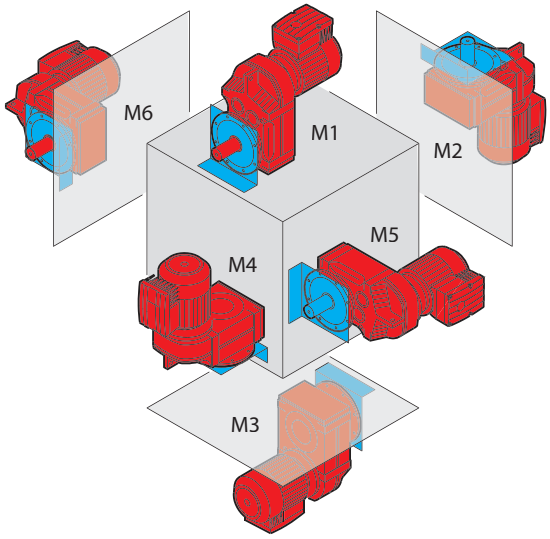

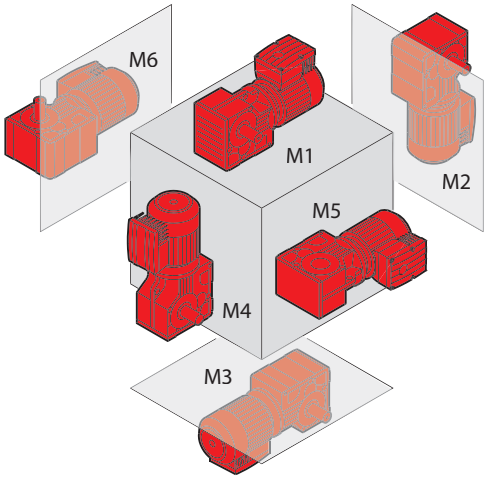

K..
S..
W..

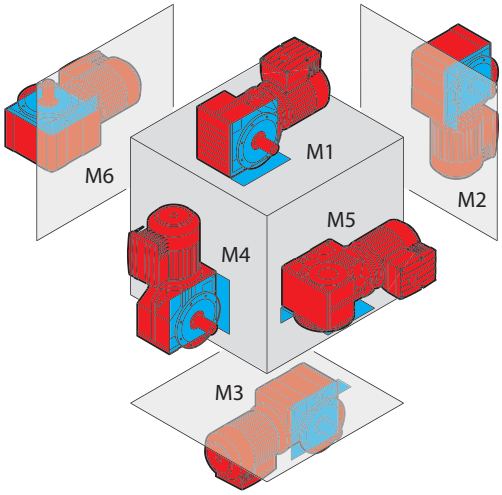

50203AXX

* Detailed information on the mounting positions for SEW gearmotors can be found inside the catalog.

Selection table structure

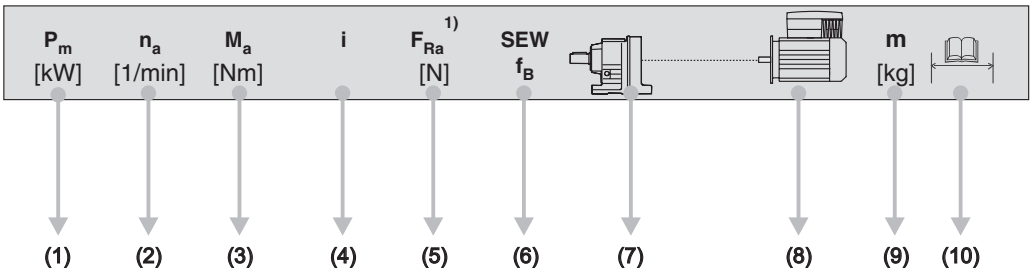

63854AXX

(1) Rated power driving motor
(2) Output speed
(3) Output torque
(4) Gear unit ratio
(5) Permitted overhung load output side
(6) Service factor
(7) Gear unit type
(8) Motor type
(9) Weight
(10) Dimension sheet page number

* Finite gear unit reduction ratio
1) Overhung load for foot-mounted gear units with solid shaft, overhung loads for other gear unit types upon request

Notes on the dimension sheets for gearmotors

Scope of delivery	
	= Standard parts delivered by SEW.
	= Standard parts not delivered by SEW.

Multiple-spline shafts	
D_m	= Measuring roller diameter
M_e	= Test dimension

Drive selection using the electronic catalog from SEW-EURODRIVE

SEW-EURODRIVE provides an electronic catalog in the SEW Workbench for convenient selection of drive components. You enter the required data for selecting the drive in a menu-guided process and obtain a drive selection as result.

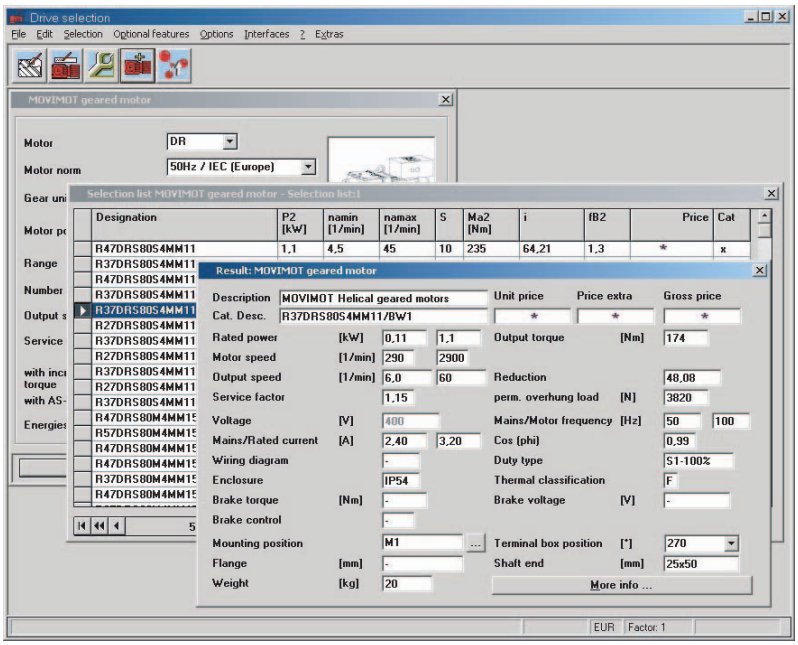

63435axx

How we're driving the world

With people who think fast and develop the future with you.

With a worldwide service network that is always close at hand.

With drives and controls that automatically improve your productivity.

With comprehensive knowledge in virtually every branch of industry today.

With uncompromising quality that reduces the cost and complexity of daily operations.

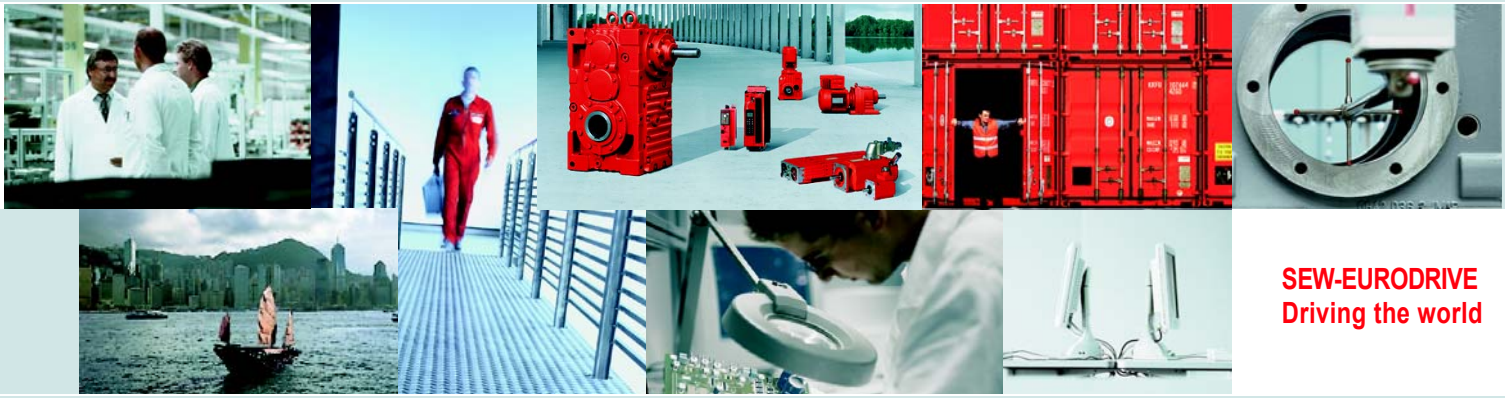

SEW-EURODRIVE
Driving the world

With a global presence that offers responsive and reliable solutions. Anywhere.

With innovative technology that solves tomorrow's problems today.

With online information and software updates, via the Internet, available around the clock.

SEW-EURODRIVE GmbH & Co KG
P.O. Box 3023 · D-76642 Bruchsal / Germany
Phone +49 7251 75-0 · Fax +49 7251 75-1970
sew@sew-eurodrive.com

→ www.sew-eurodrive.com